LONDON TRANSPORT

ROUTEMASTER BUS

RM 857

Pack 03

BUILD INSTRUCTIONS

AGORA MODELS

STAGE 21

FITTING THE SECOND PAIR OF REAR WHEELS

With this stage you receive the second rear tyre and wheel rim for the right-hand pair of rear wheels. The pair of rear wheels is assembled and fitted to the rear axle.

KEY TO PARTS SUPPLIED

21A	Tyre	**GM**	2.3 x 5mm (x4)
21B	Rear inner wheel rim	**IM**	2.6 x 5mm (x2)
21C	Brake disc		
21D	Washer		

1

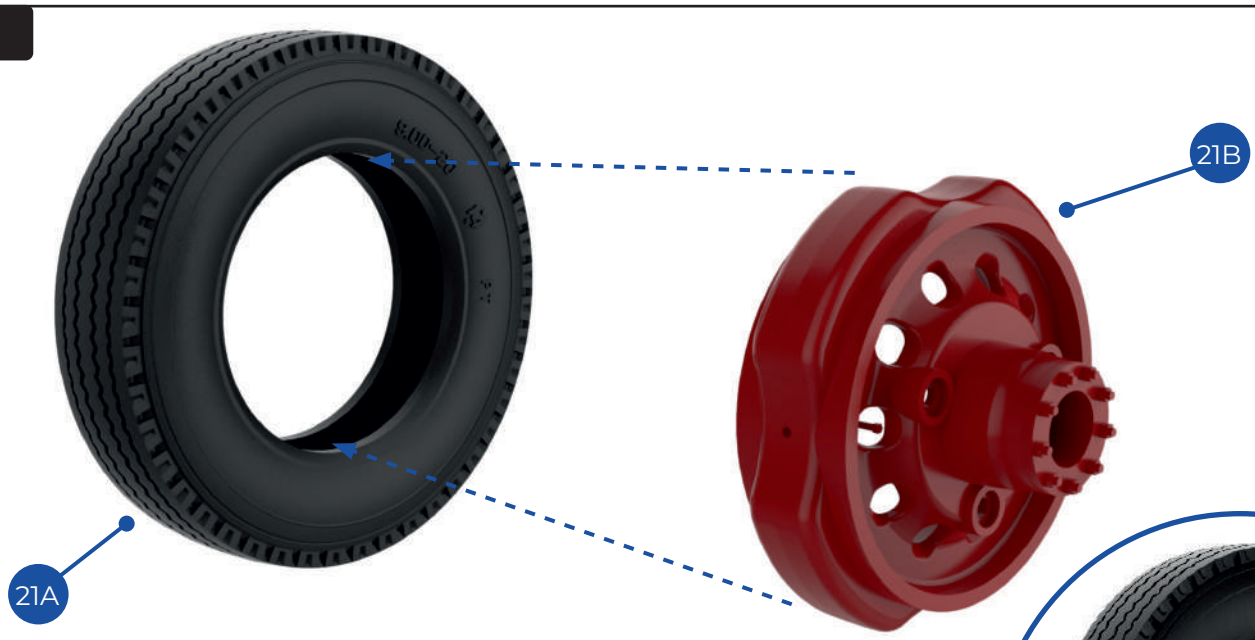

1 Soften the tyre (21A) for a couple of minutes in warm water and dry it. Alternatively, you can heat it with a hair dryer. Fit the tyre over the rear inner wheel rim (21B). Ensure that it is properly fitted over the wheel rim on both sides (inset).

2

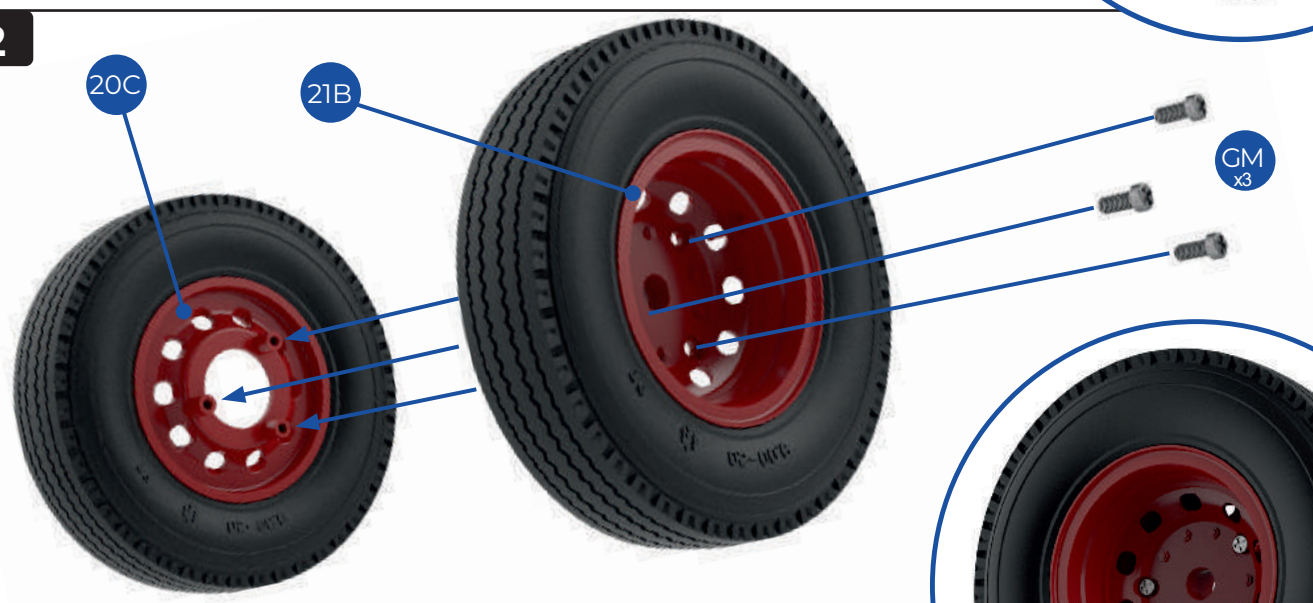

2 Take the tyre and wheel rim (20C) assembled in the previous stage and the tyre and wheel (21B) from step 1. There are three fixing points on each of the rear wheel rims. When they are correctly aligned, fix the wheel rims firmly together with three GM screws.

3

3 Noting the notch in the brake disc (21C), fit the disc over the offside end of the rear axle (14A) on the chassis assembly. Fit the pair of wheels onto the axle.

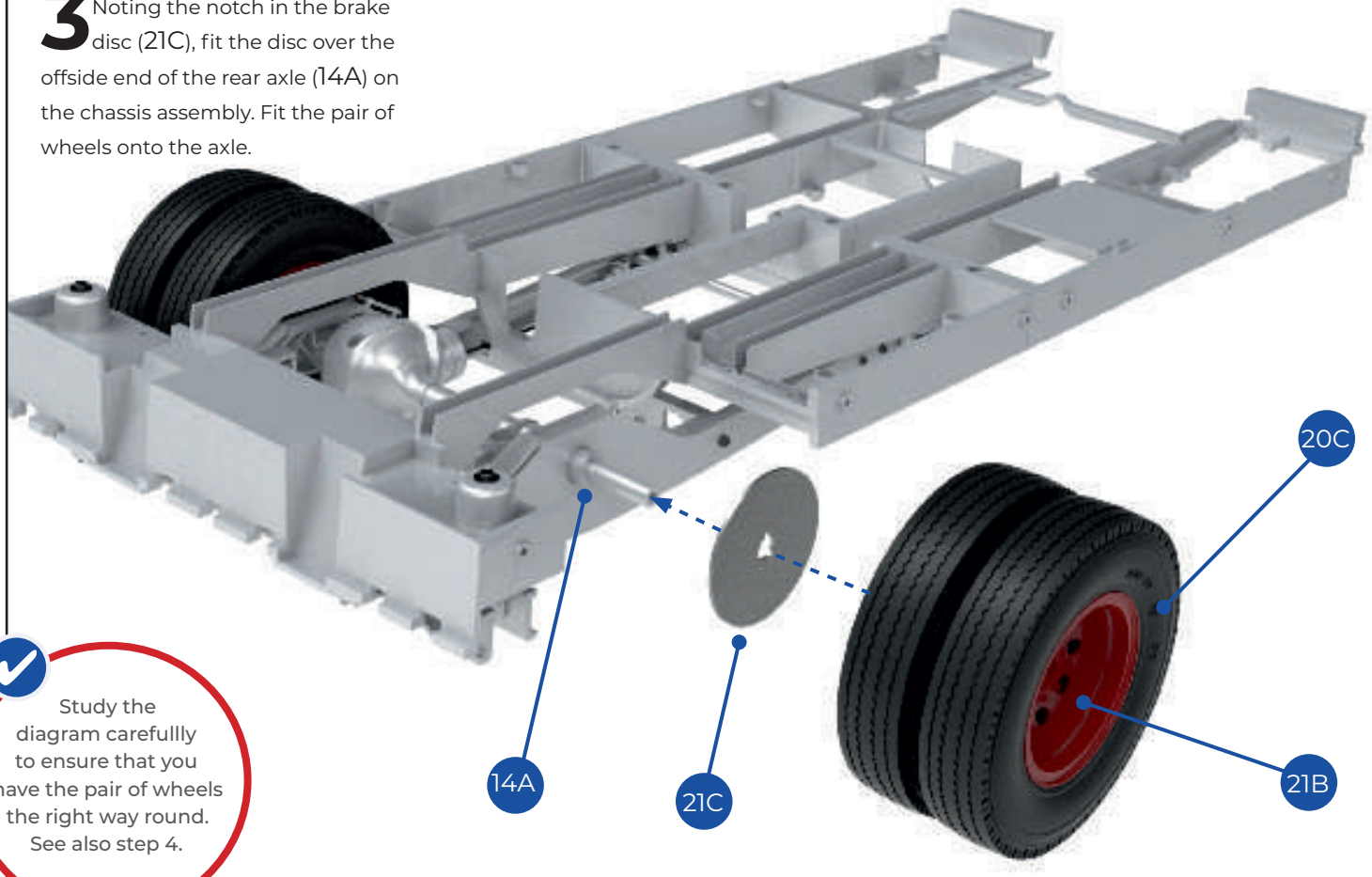

Study the diagram carefullly to ensure that you have the pair of wheels the right way round. See also step 4.

4

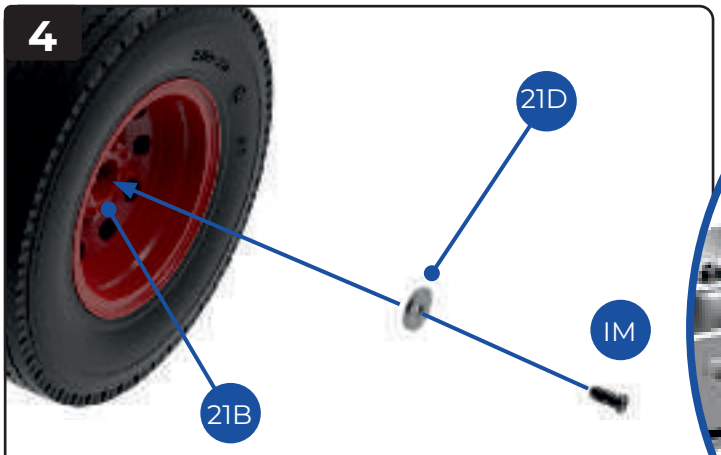

4 Take the washer (21D). Pass an IM screw through the washer and into the end of the axle that is visible at the centre of the wheel rim (21B). Tighten the screw to hold the wheel in place (inset, right). Do not overtighten.

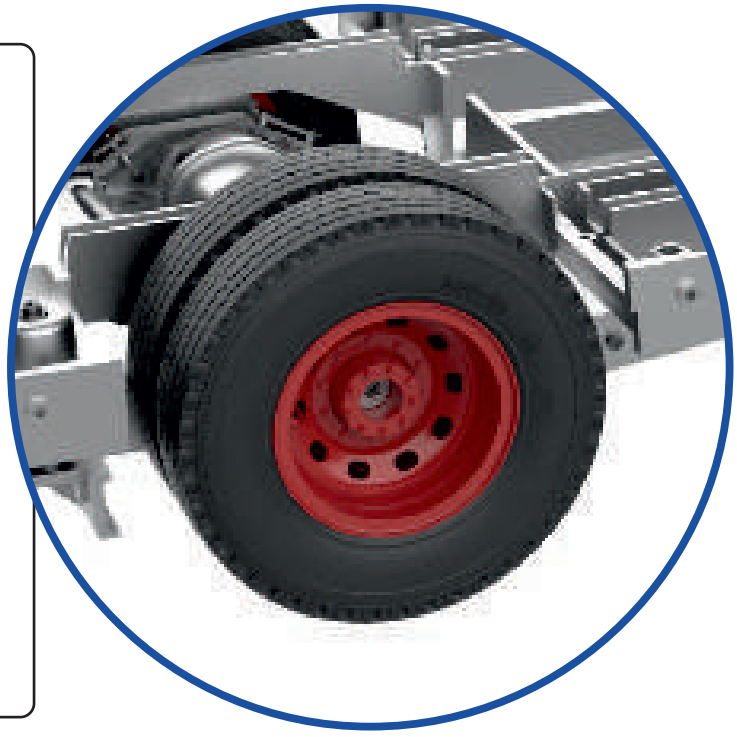

5

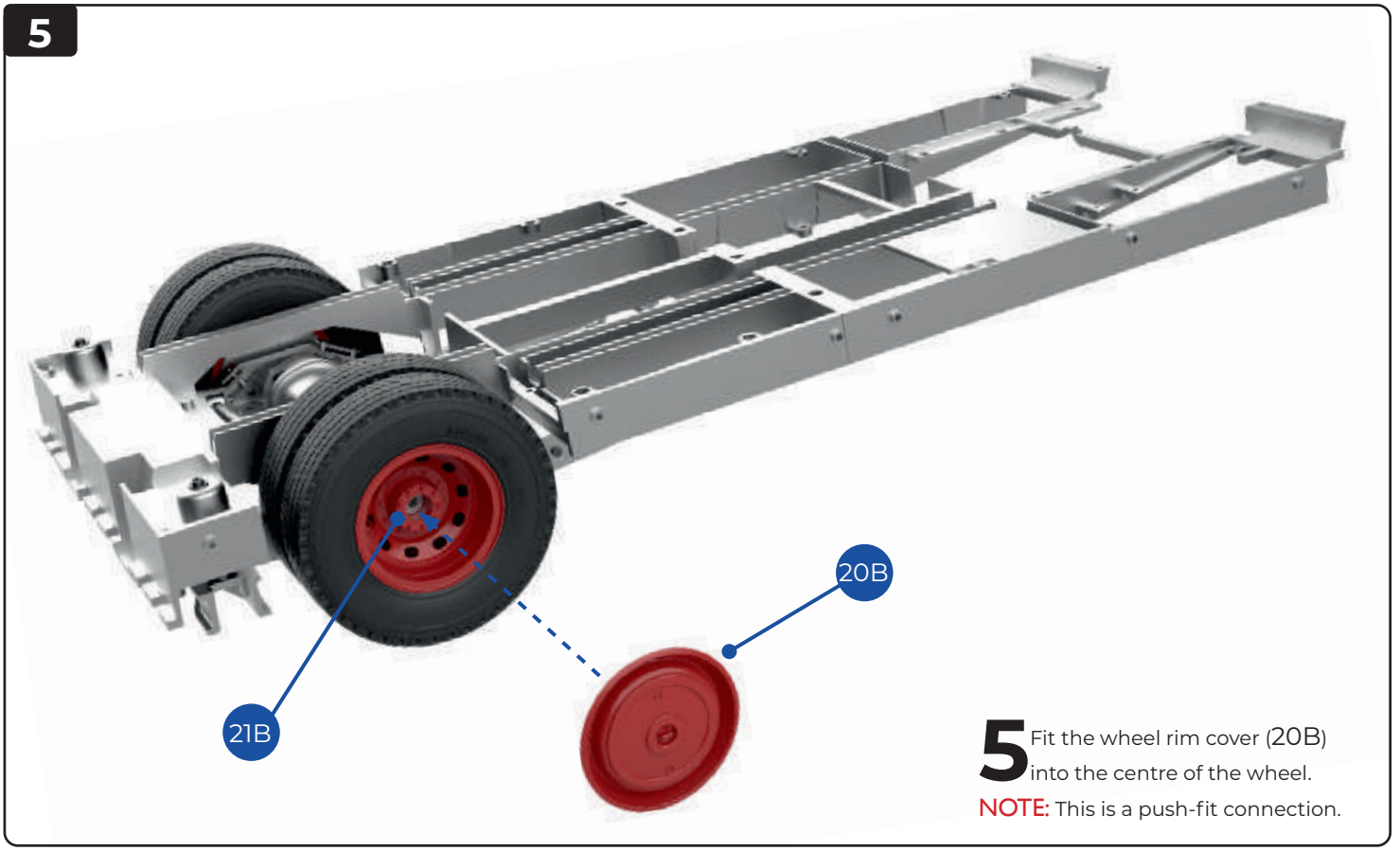

5 Fit the wheel rim cover (20B) into the centre of the wheel.

NOTE: This is a push-fit connection.

Assembly guide

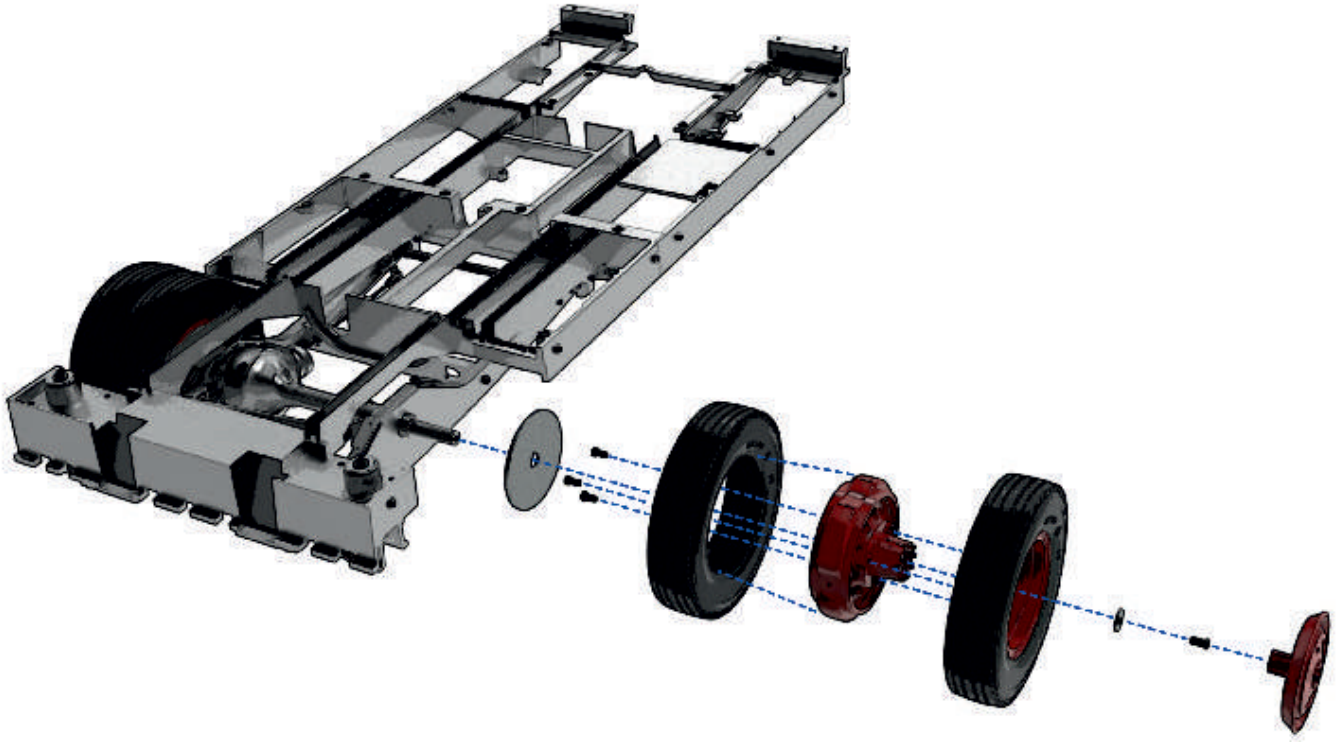

Finished views

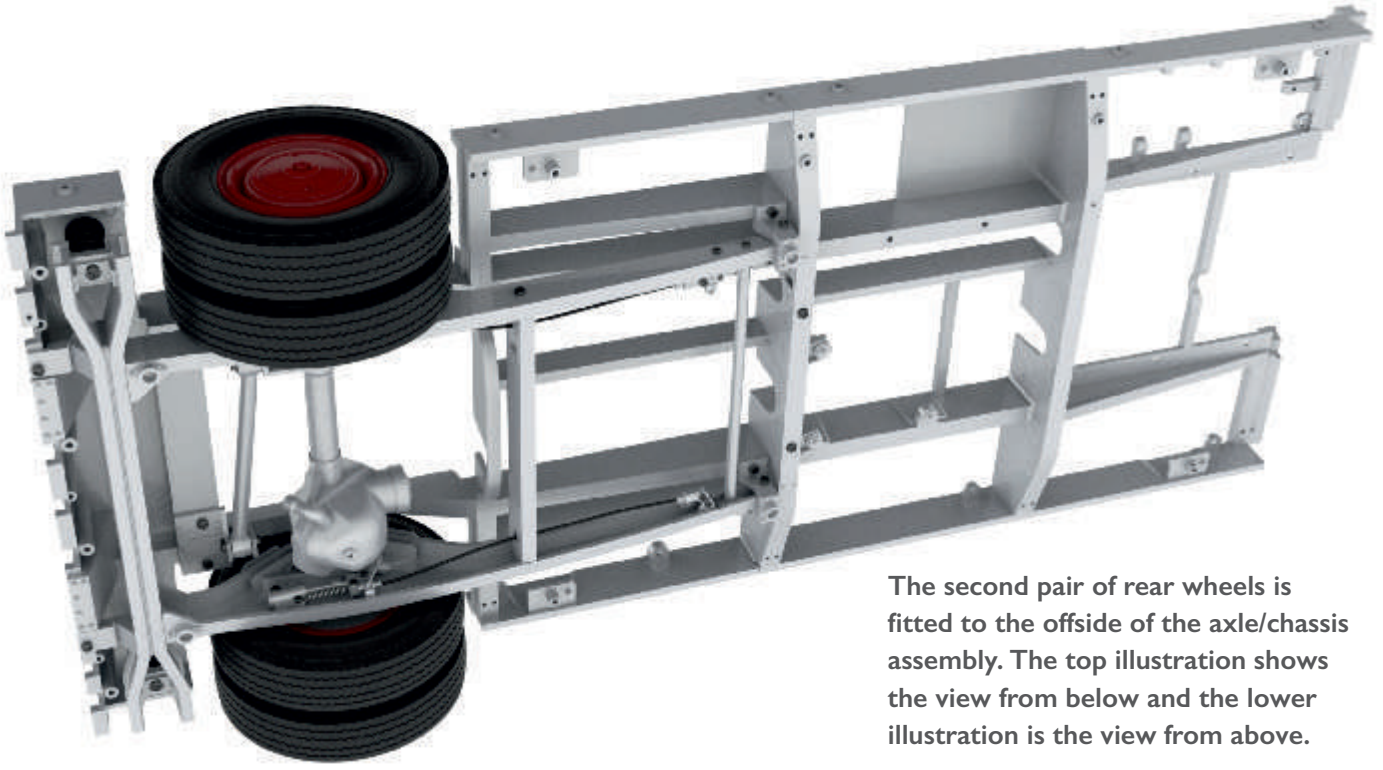

The second pair of rear wheels is fitted to the offside of the axle/chassis assembly. The top illustration shows the view from below and the lower illustration is the view from above.

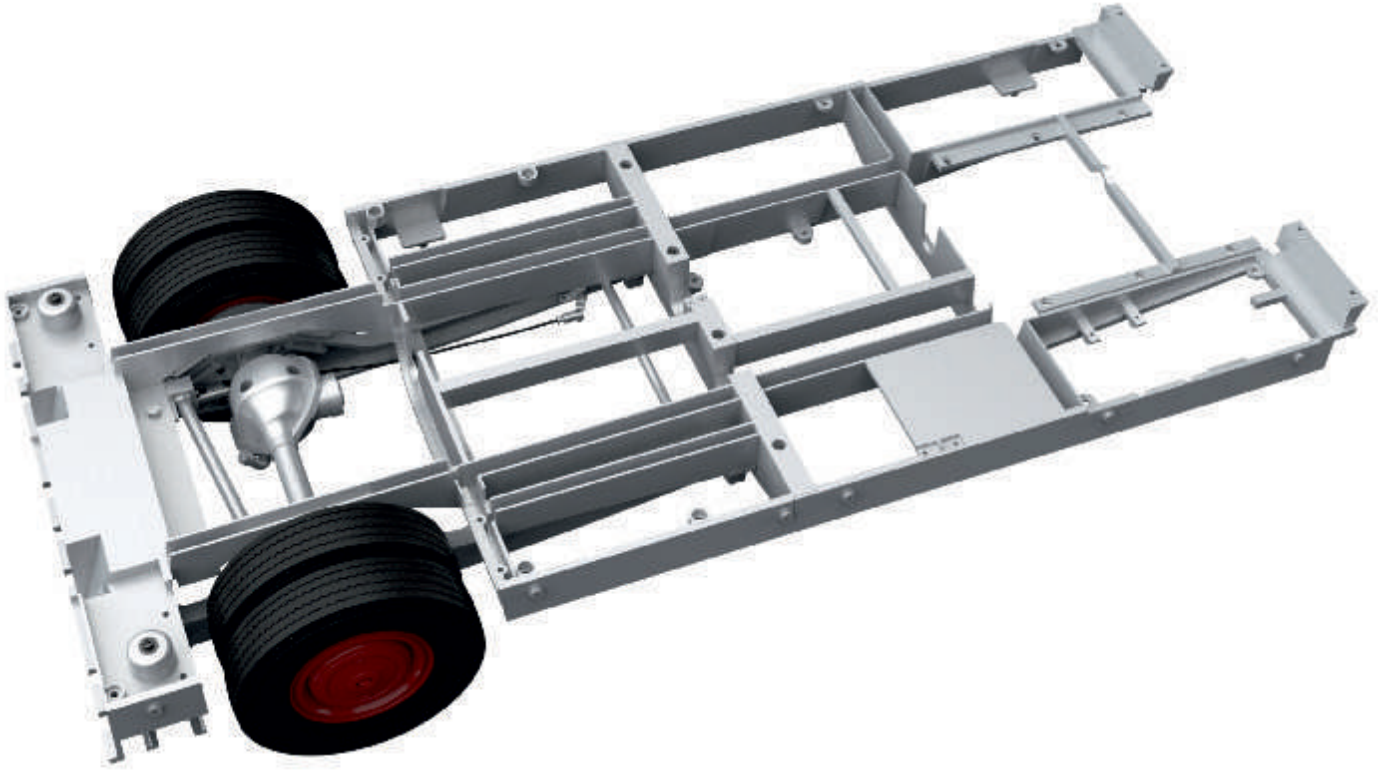

STAGE 22

ASSEMBLING THE DRIVE UNIT

The drive unit is part of the hydraulic system for the brakes, and also includes an air compressor that is connected to the gearbox. Tweezers have been supplied to help with the construction.

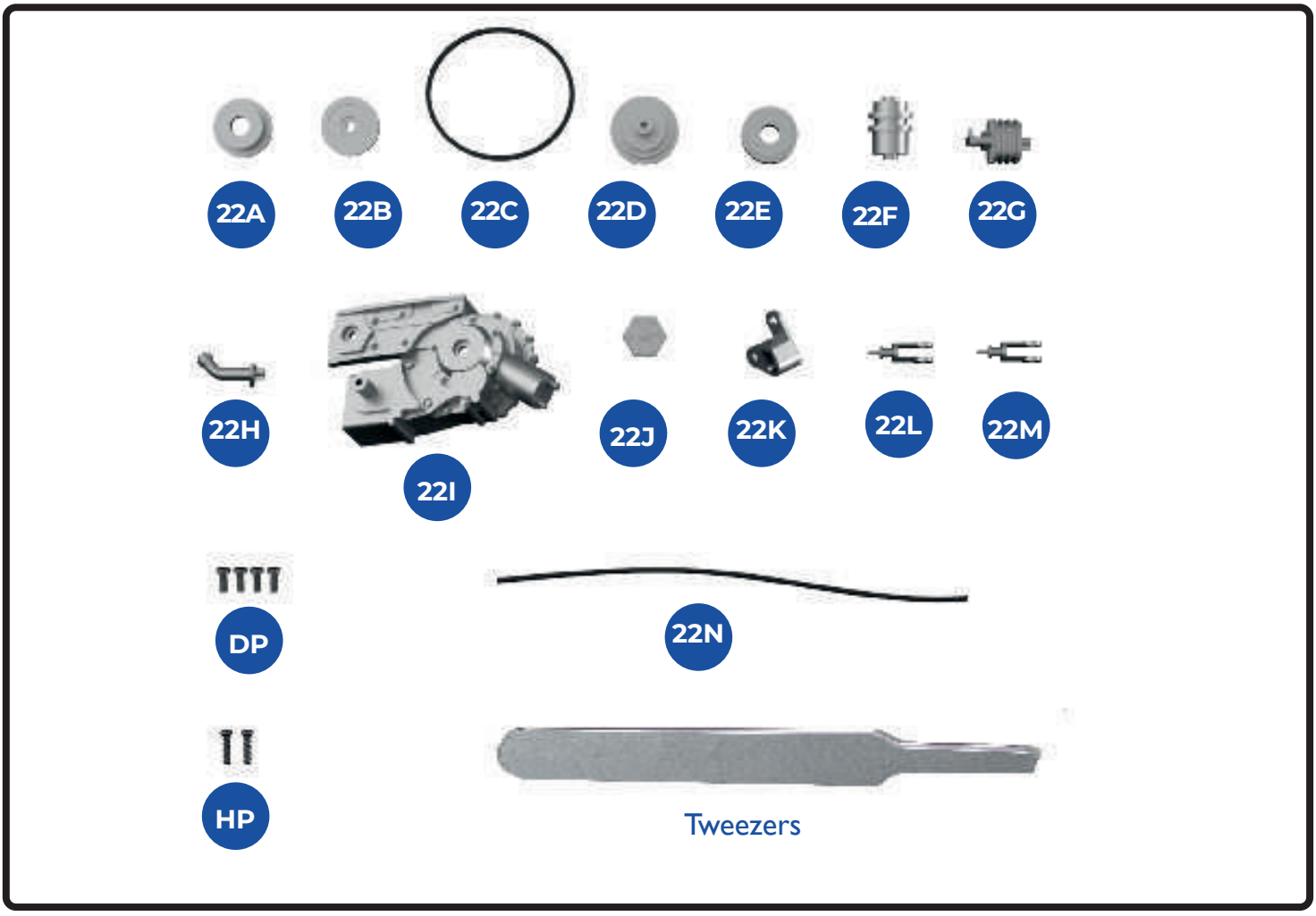

KEY TO PARTS SUPPLIED

22A	Pulley wheel	22F	Brake pump drive	22L	Brake line connector
22B		22G	Compressor cooling fins	22M	Brake line connector
22C	Drive belt	22H	Pipe	22N	Brake line
22D	Pulley wheel	22I	Drive unit housing		
22E		22J	Cap	DP	1.7 x 4mm (x4)
		22K	Bracket	HP	1.7 x 6mm (x2)

Note that parts 22L and 22M are the same. See Step 8.

1

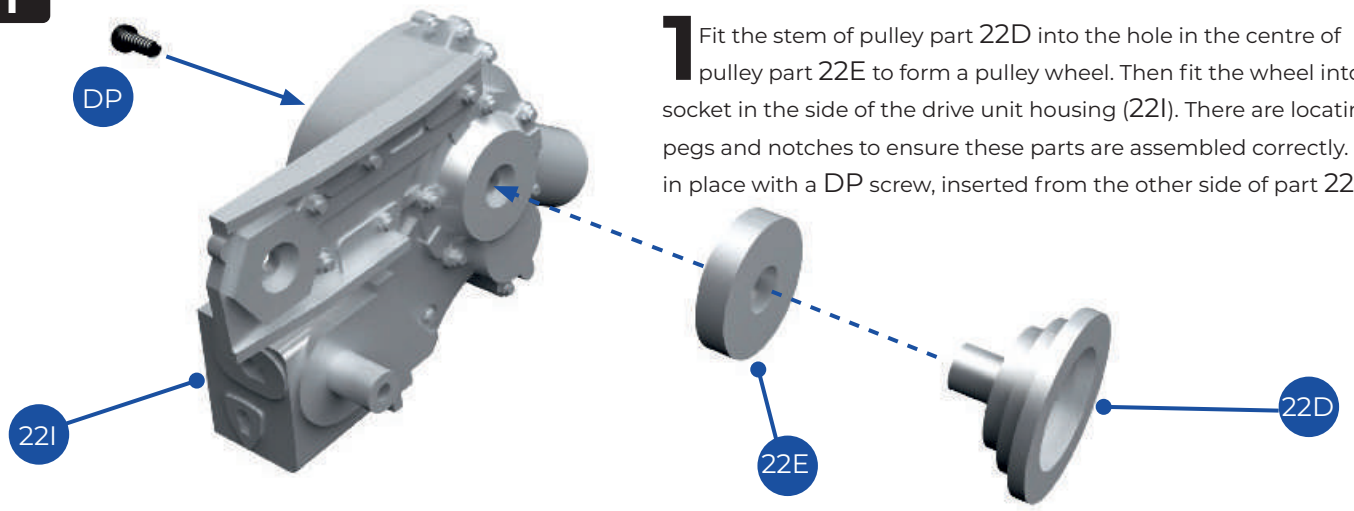

1 Fit the stem of pulley part 22D into the hole in the centre of pulley part 22E to form a pulley wheel. Then fit the wheel into the socket in the side of the drive unit housing (22I). There are locating pegs and notches to ensure these parts are assembled correctly. Fix in place with a DP screw, inserted from the other side of part 22I.

2

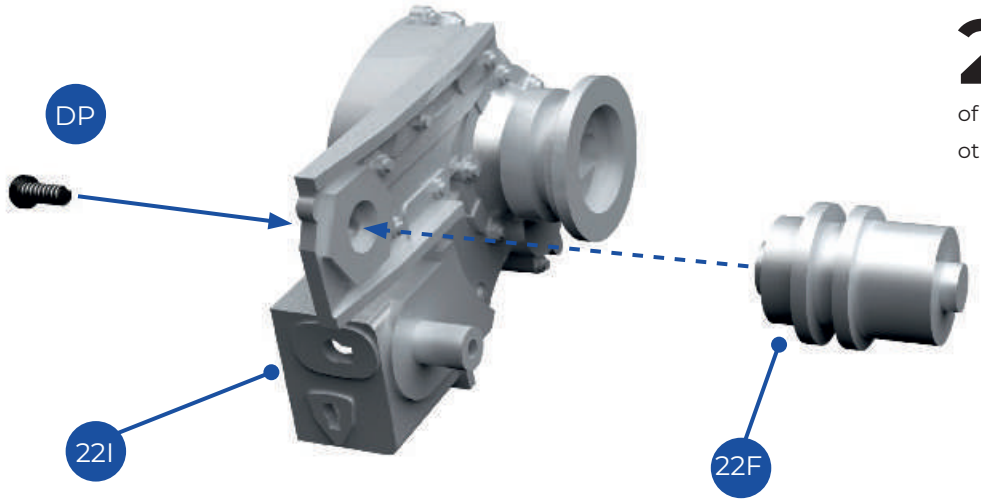

2 Fit brake pump drive 22F into the socket in the side of 22I. Fix in place from the other side, using a DP screw.

3

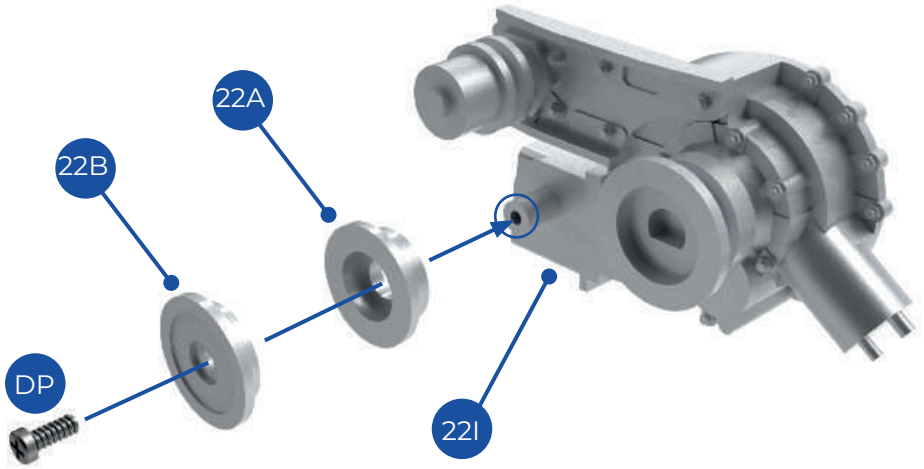

3 Fit pulley part 22A over the stem of the screw socket in 22I (circled), and then fit pulley part 22B in place on top of it to form a pulley wheel. Fix in place with a DP screw.

4

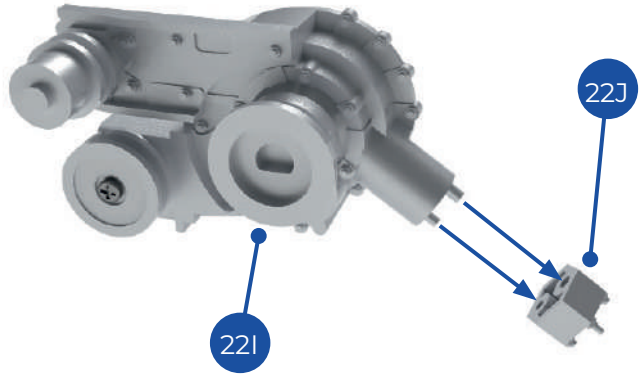

4 Fit the two pins at the end of part 22I into the sockets in the hexagonal cap (22J).
NOTE: This is a push-fit connection.

5

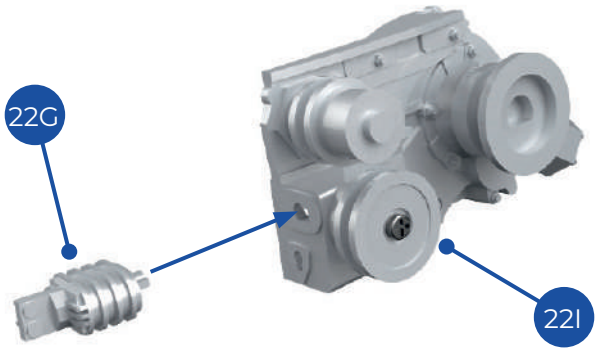

5 Turn the drive unit housing (22I) around, so that you can see the opposite end. Identify the socket for the cooling fins. Fit the peg on the end of the cooling fins (22G) into the socket. Again, this is a push-fit connection.

6

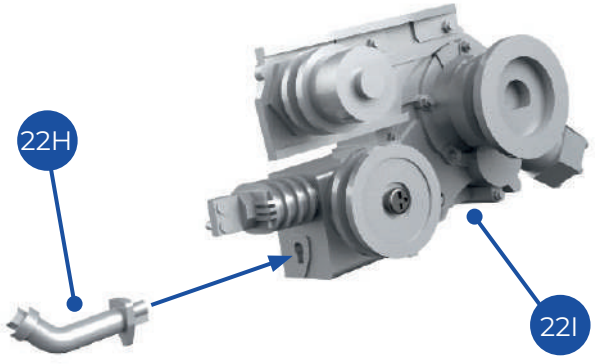

6 Fit the pipe (22H) into the socket in part 22I beneath the cooling fins. This is a push-fit connection.

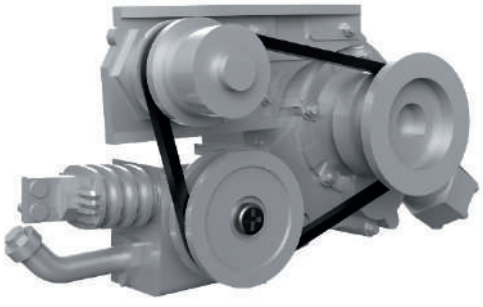

7

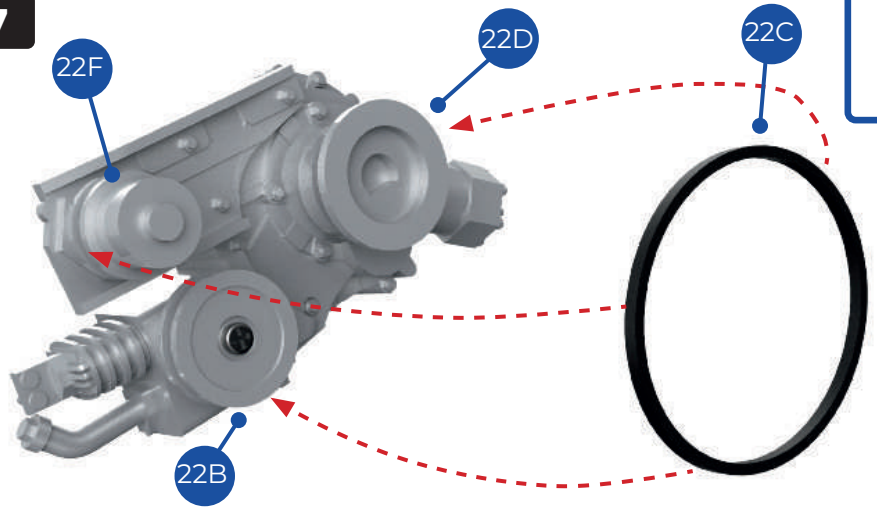

7 Take the drive belt (22C). Identify the channels that it fits into: there is a channel in each of the pulley wheels and in the brake pump drive (22F). Stretch the belt to fit over the parts and into the channels. The inset (above) shows the belt in place.

Assembly guide

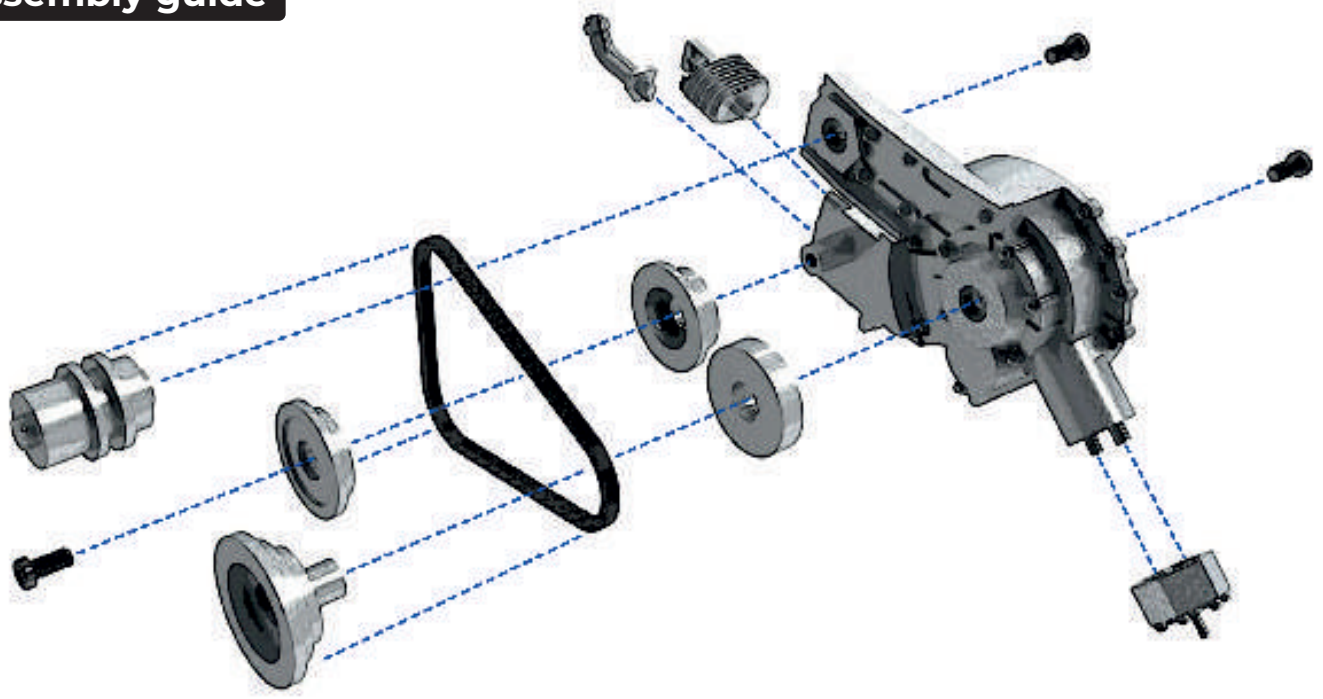

Finished views

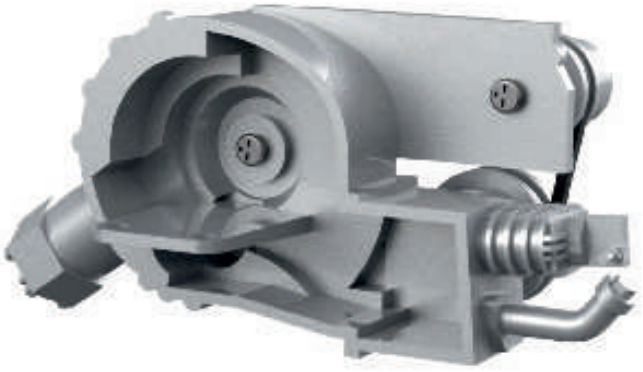

Parts 22L and 22M are the same, but we have labelled them separately for clarity when you come to connect the brake line.

8

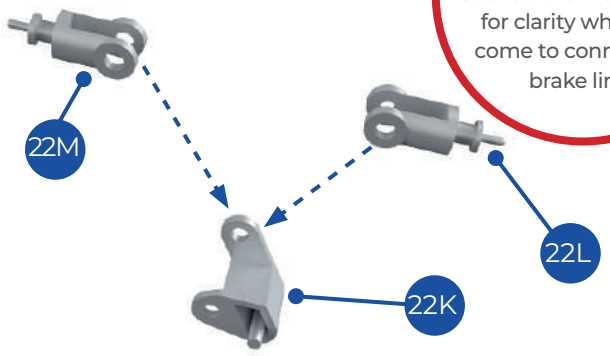

8 Take the two brake line connectors, 22M and 22L. Take the bracket (22K) and check the orientation matches the diagram. Position the arms of the connectors on either side of the eyelet, so that the holes are all aligned (see also next step).

9

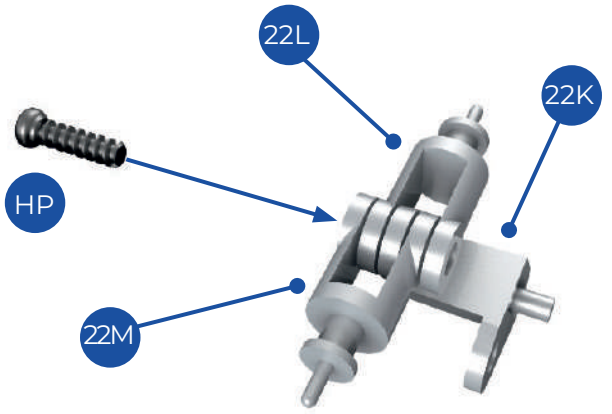

9 Fix the connectors (22M and 22L) to the bracket (22K) using an HP screw.

Make sure that the arrangement of the connectors on either side of the eyelet in the bracket matches the illustration before fixing in place.

10

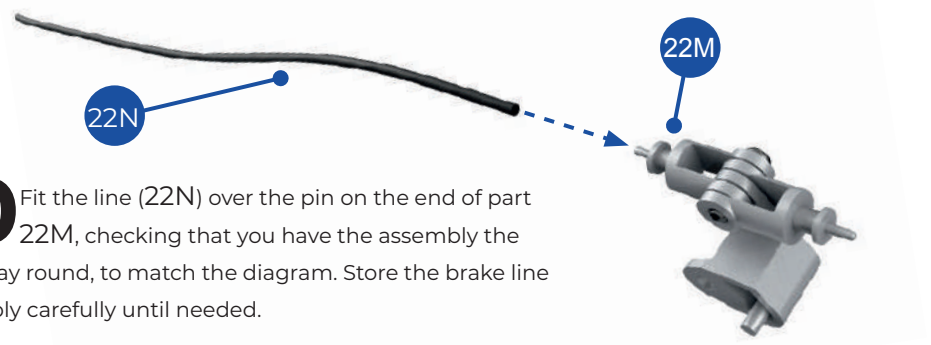

10 Fit the line (22N) over the pin on the end of part 22M, checking that you have the assembly the right way round, to match the diagram. Store the brake line assembly carefully until needed.

Assembly guide

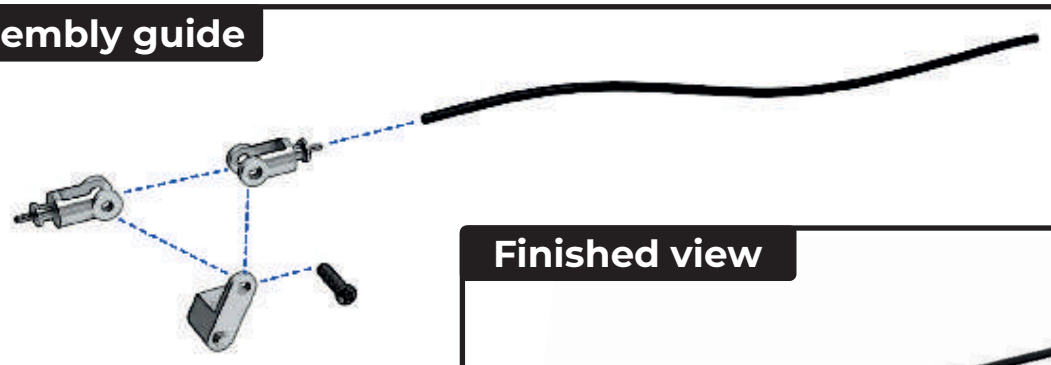

Finished view

STAGE 23

HEADER TANK ASSEMBLY AND ROD FOR BRAKE SYSTEM

The header tank for the hydraulic fluid in the brake system is assembled and fitted to the sub-frame. We also add other details to the underside of the sub-frame.

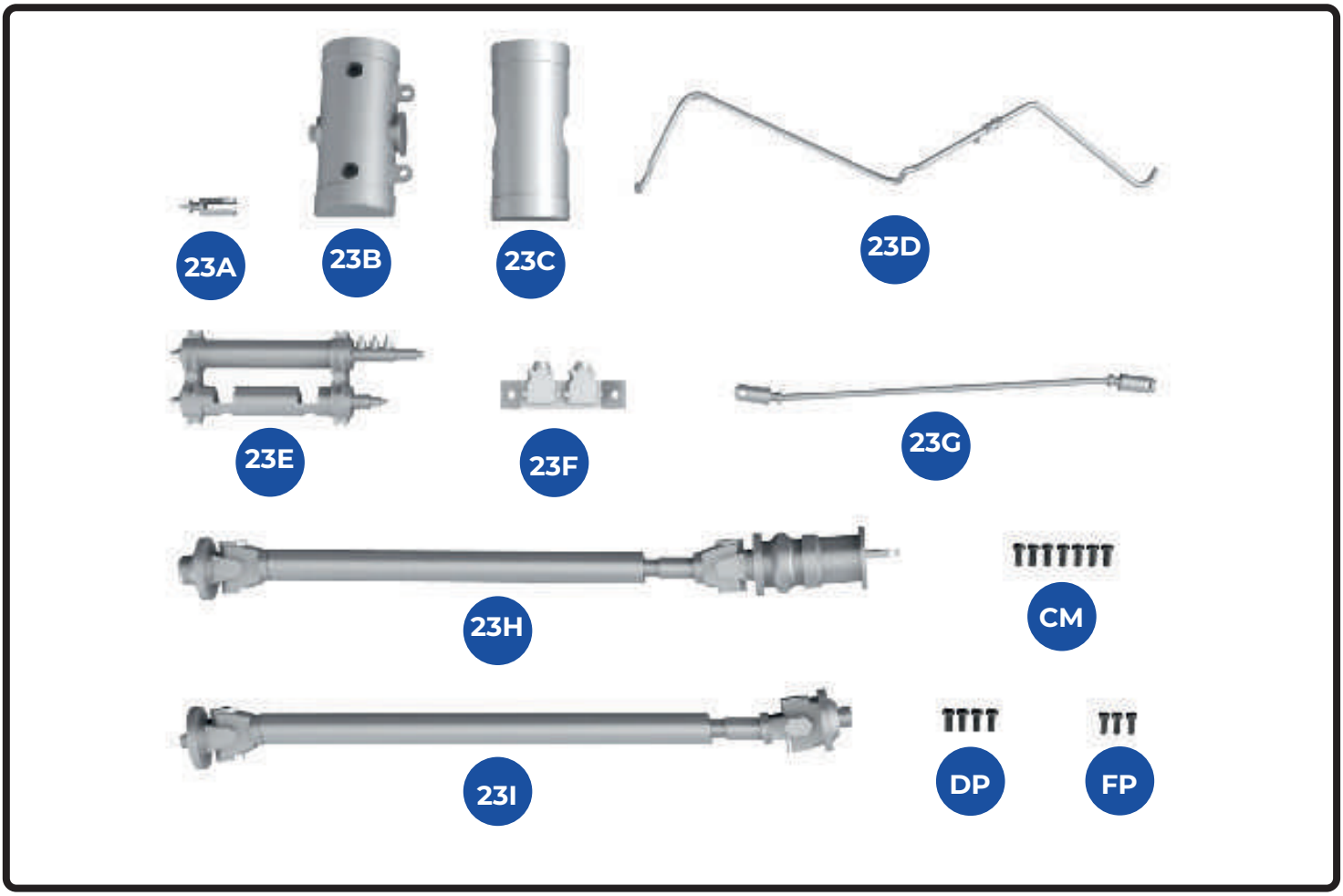

KEY TO PARTS SUPPLIED

23A	Connector	**23H**	Prop shaft
23B] **23C**]	Hydraulic fluid header tank parts	**23I**	Prop shaft
23D	Brake line	**CM**	1.7 x 4mm (x7)
23E	Brake accumulators	**DP**	1.7 x 4mm (x4)
23F	Bracket	**FP**	1.5 x 4mm (x3)
23G	Rod		

1

1 Work from the upper side of the chassis frame, and check the orientation of the accumulators, 23E. Slot part 23E over the two eyelets in the chassis frame 17A, as indicated by the dotted lines. When part 23E is in position, with screw sockets aligned, fix in place from the top, using two CM screws. The inset shows the accumulators 23E in place, seen from the opposite angle.

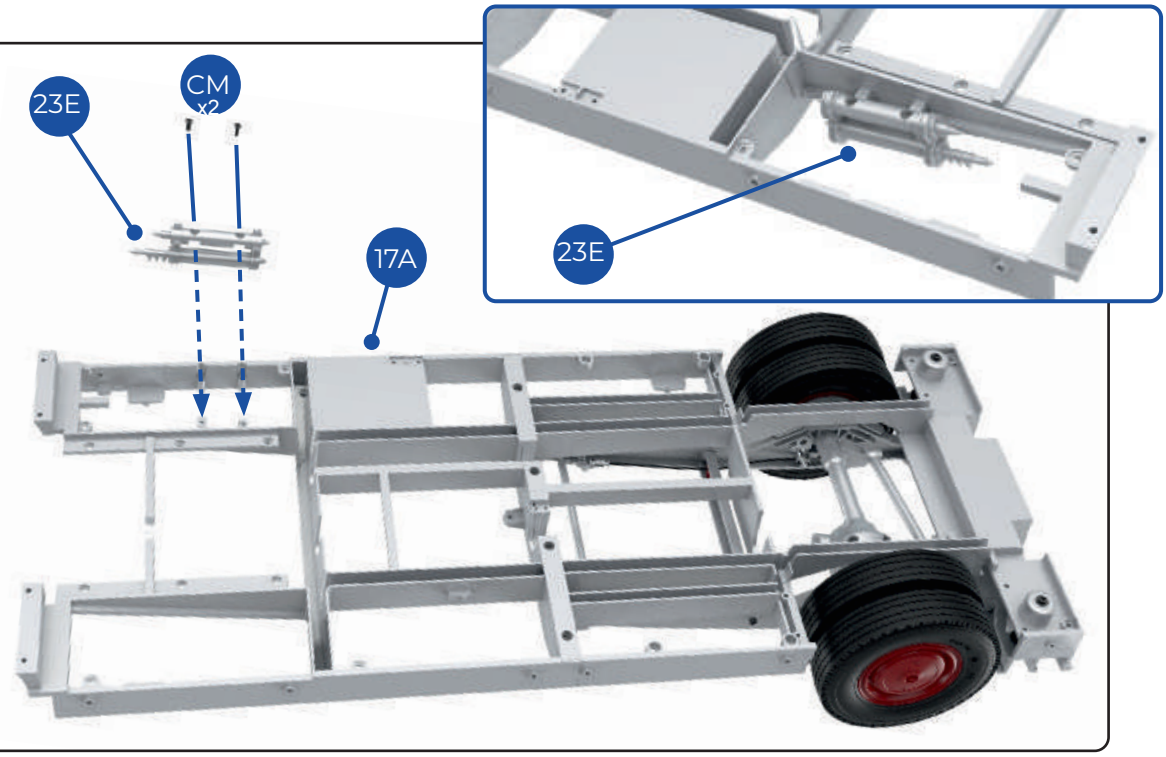

2

2 Turn the chassis frame over. Identify the two fixing points on the frame for the bracket 23F. Position part 23F across the corner, checking that you have it in the correct orientation. Fix in place with two CM screws. The inset (right) shows the bracket 23F in place.

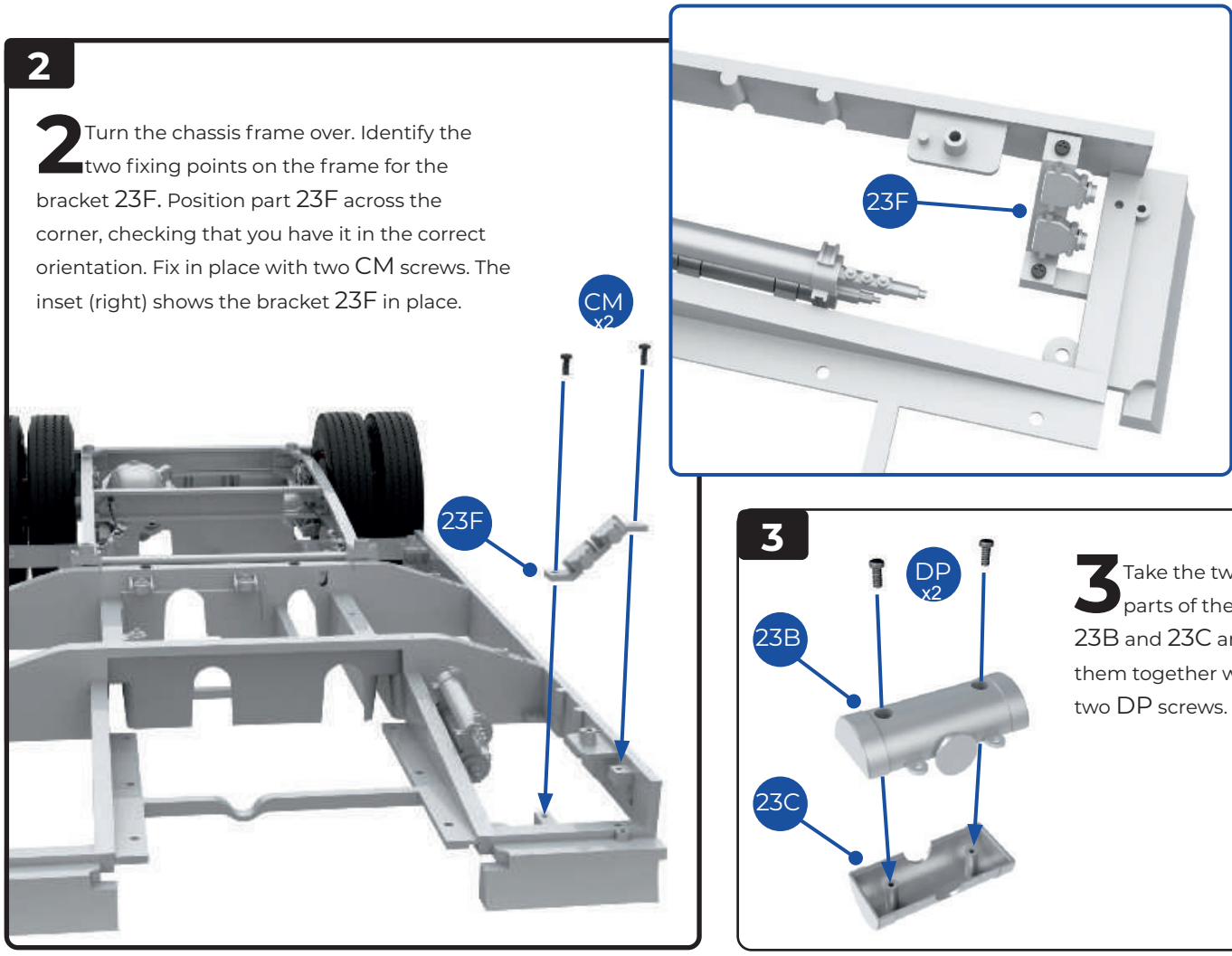

3

3 Take the two parts of the tank, 23B and 23C and fix them together with two DP screws.

4

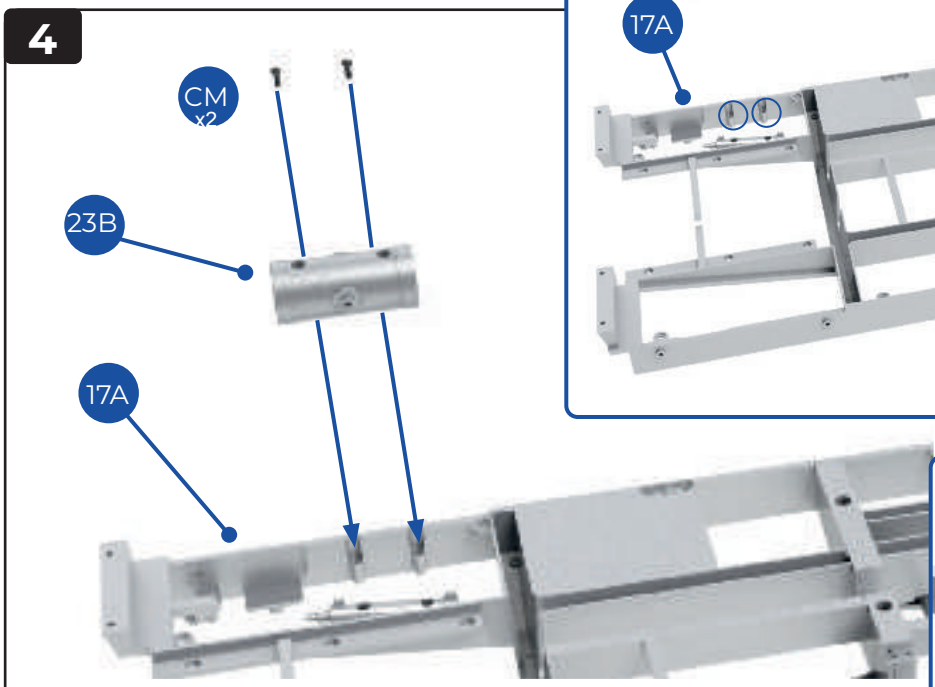

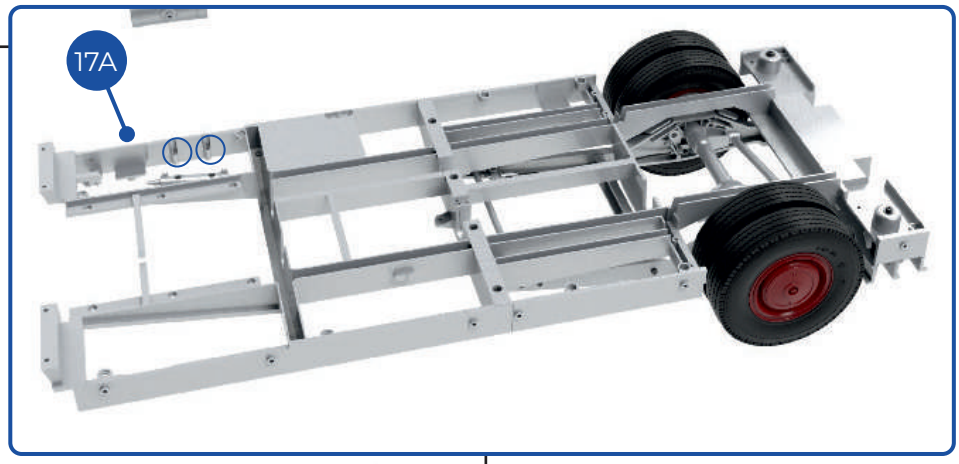

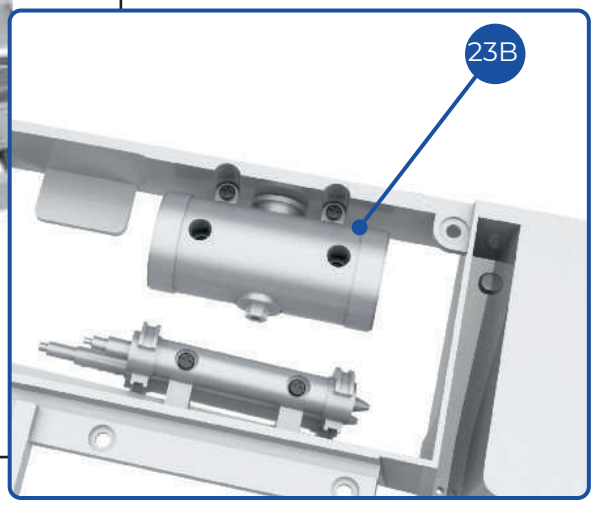

4 Turn the frame over and identify the fixing points for the tank, circled in inset, top. Fix the tank in place, using two CM screws. NOTE: The screws go through the eyelets on the side of the tank and into the sockets on the side of the frame 17A. The inset (right) shows the tank in place.

5

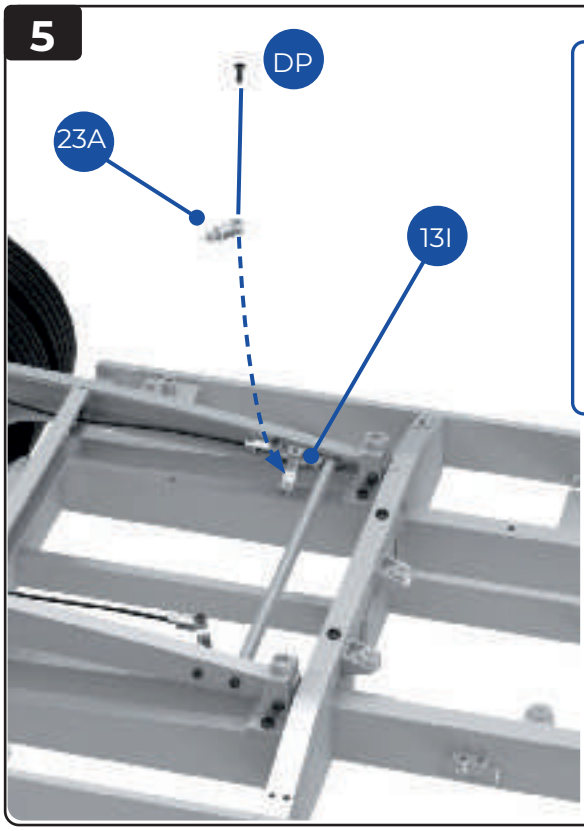

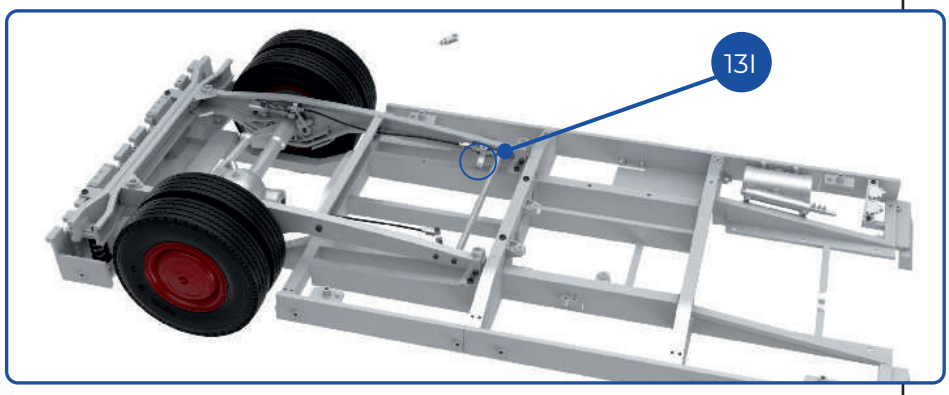

5 On the underside of the chassis frame, identify the fixing point on the control lever 13I (circled, top inset) for the connector 23A. Slot the ends of the connector over the eyelet in part 13I. NOTE: The larger eyelet of part 23A is uppermost as you work. Support part 13I, which is quite delicate, while you fix the connector in place with a DP screw. The inset on the right shows part 23A in place.

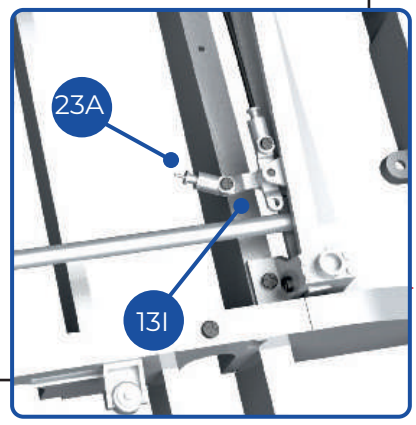

6

6 Identify the control levers, 12I and 13I, each with a brake line connection. Test-fit rod 23G across the sub-frame to ensure the correct orientation; it fits between the control levers, (12I and 13I) as shown in the inset. The ends of part 23G slot over the corresponding eyelets in the control levers. Fix each end in place with an FP screw. NOTE: Part 23G goes under the brake line connection that has been made to part 12I.

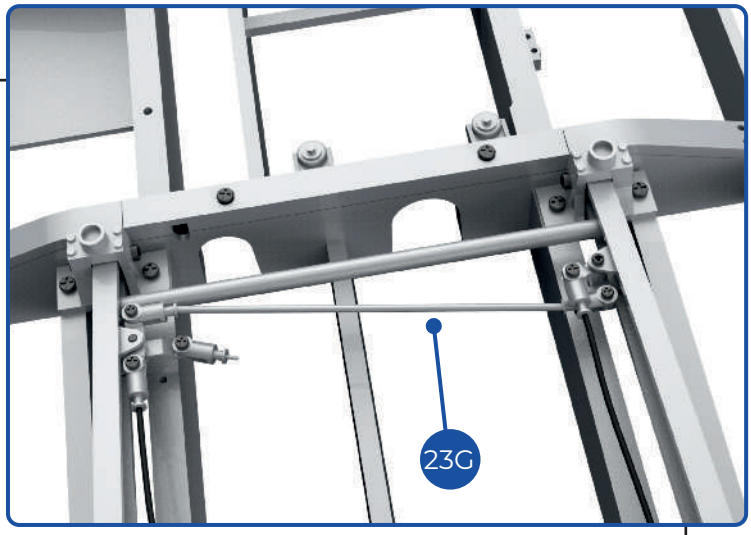

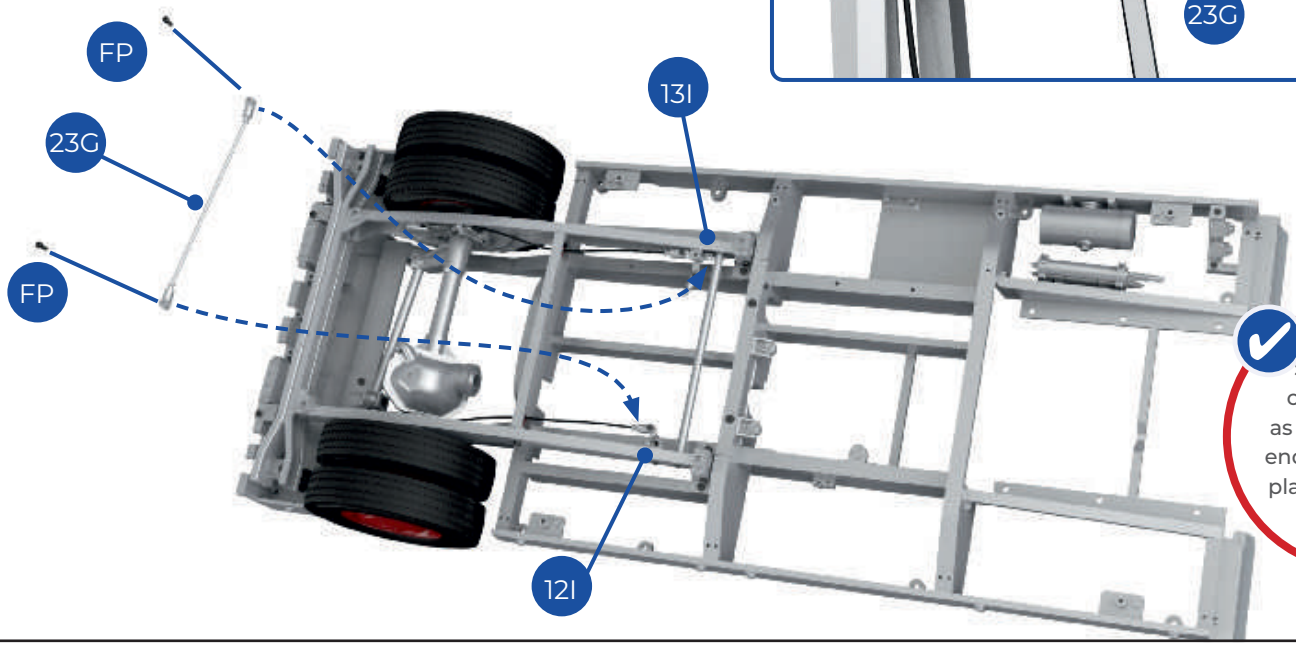

Support the control levers as you screw the ends of the rod in place, to prevent damage.

7

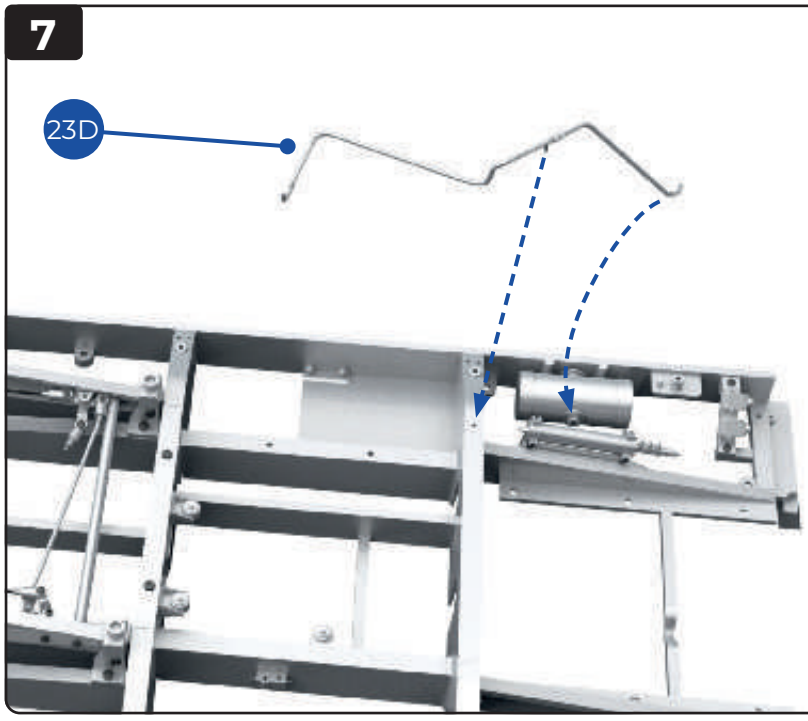

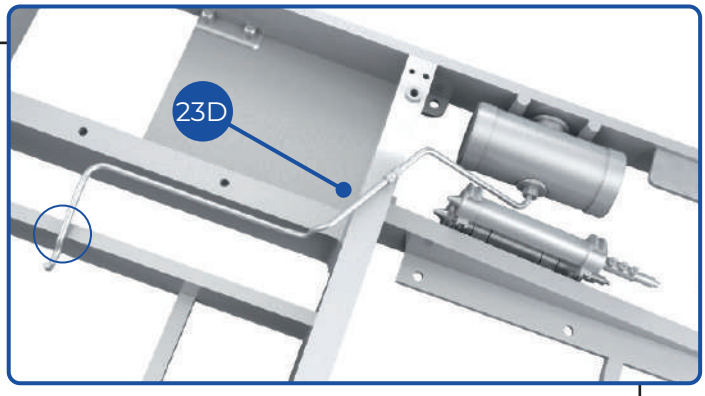

7 Take the line 23D and check the shapes of the ends and the position of the pin in the centre section, to ensure you get it the right way round. Fit one end of the line into the socket on the tank 23B, and fit the pin into the hole in part 17A. The inset above shows the line in place – the free end of the line fits over a strut in the frame (circled). Use a small piece of masking tape to hold the line in place temporarily.

Finished views

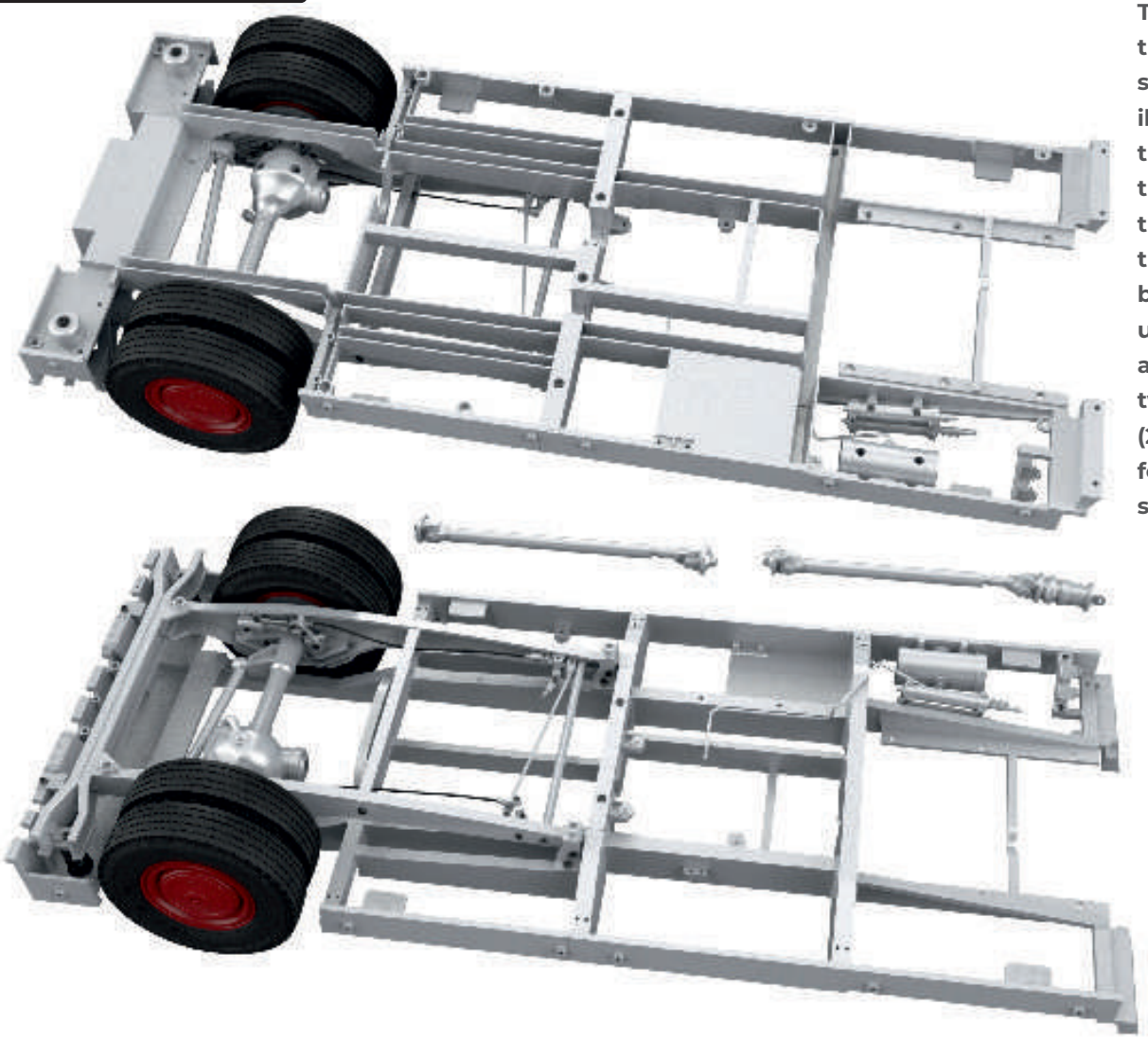

This completes the work for stage 23. The illustration at the top shows the upper side of the chassis and the illustration below shows the underside. Label and store the two prop shafts (23H and 23L) for use in future stages.

Assembly guide

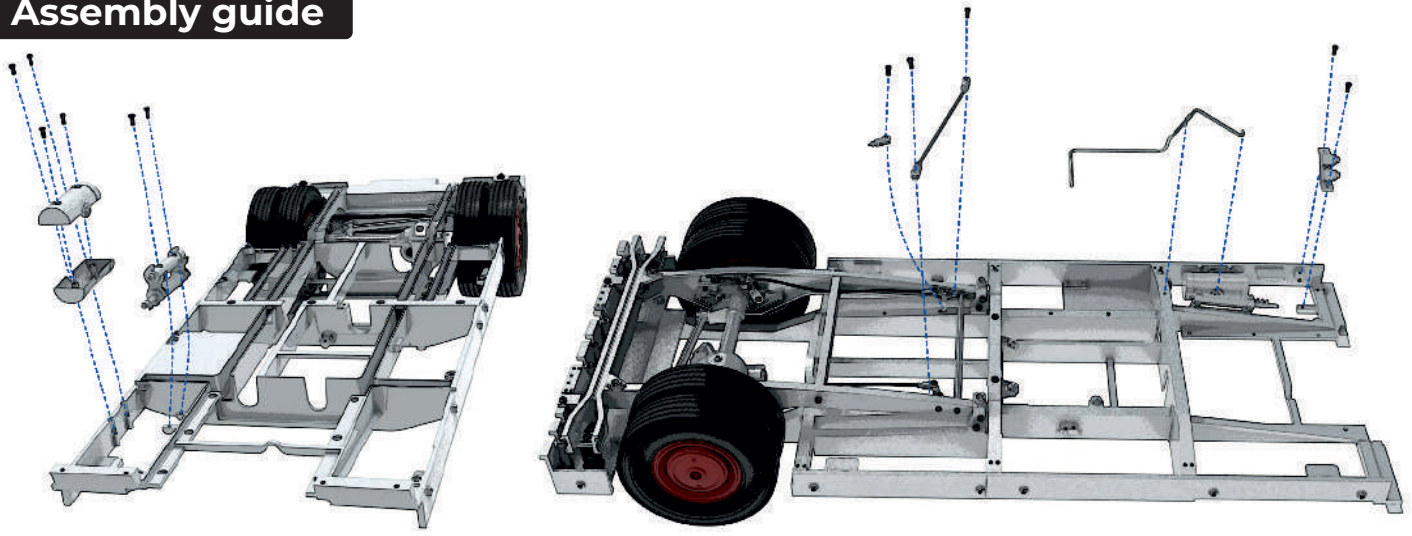

STAGE 24

GEARBOX CASING AND CONNECTIONS

Terminals are fitted to the gearbox casing, and lines are used to connect them. The drive unit housing is fitted to the gearbox casing and the assembly is attached to the sub-frame.

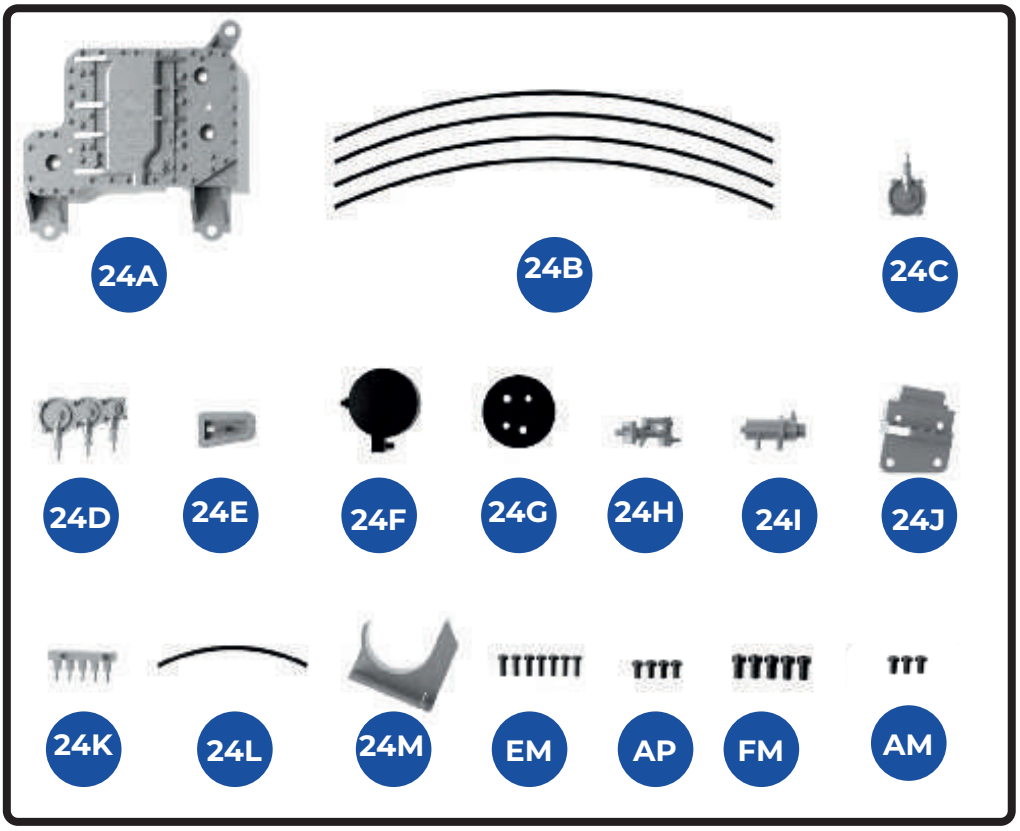

KEY TO PARTS SUPPLIED

24A	Gearbox casing
24B	Lines
24C	Valve
24D	Valves
24E	Cover
24F	Tank
24G	Tank end
24H	Regulator
24I	Connector
24J	Valve base
24K	Valve block
24L	Line
24M	Cover
EM	1.5 x 4mm (x7)
AP	1.7 x 3mm (x4)
FM	2.3 x 4mm (x5)
AM	1.7 x 3mm (x3)

1

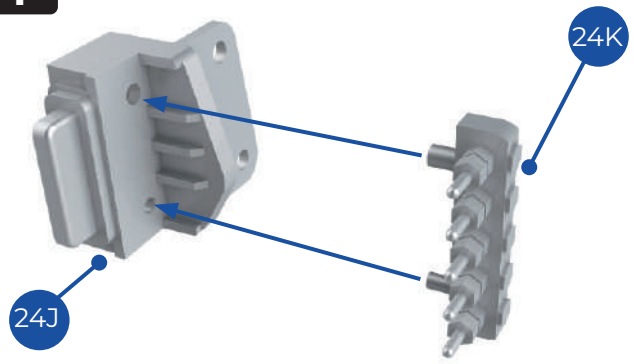

1 Fit the valve block 24K to the valve base 24J. This is a push-fit connection.

2

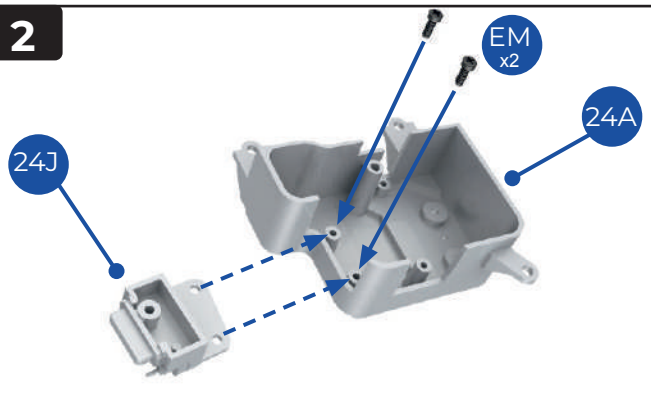

2 Position the two screw eyelets on the flange of the valve base 24J over the screw sockets on the gearbox casing 24A. Fix in place with two EM screws.

3

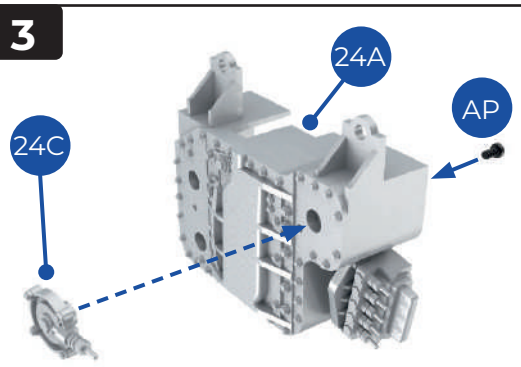

3 Fit the stem of the screw socket on the valve 24C into the corresponding hole in the gearbox casing 24A as shown. Fix in place from the inside of part 24A with an AP screw.

4

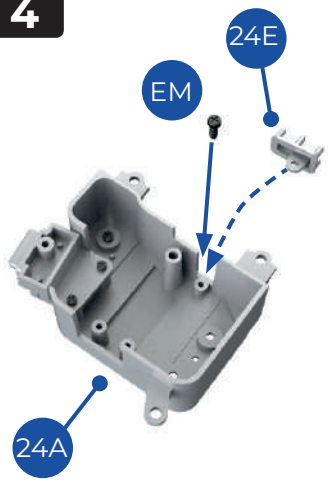

4 Looking at the inside of the gearbox casing 24A, position the tab on the cover 24E through the slot in the casing, over the screw hole. Fix the cover in place with an EM screw. Turn the casing over (see below) and fit the pegs on the valves 24D into the sockets in part 24A. Fix in place with two AP screws.

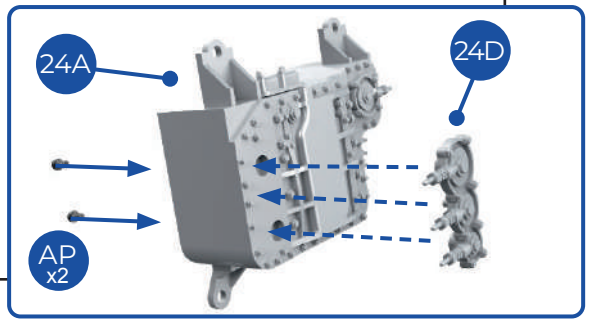

5

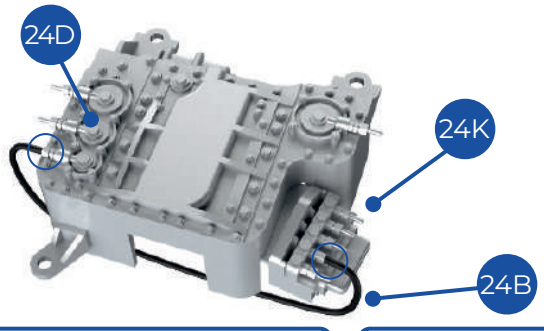

5 Take the first line, 24B. Fix one end to the first pin on the valves 24D. Wrap the line under the gearbox casing and attach the other end to the second pin on the valve block 24K. NOTE: In the diagram on the left, the first two pins are circled. Repeat the process to fit two further lines in the same way (below, left and centre). Fit the short line 24L to the pins on parts 24C and 24K (below, right).

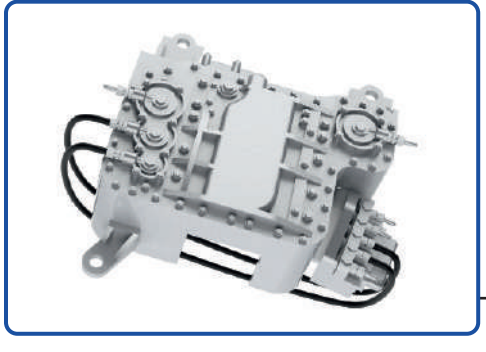

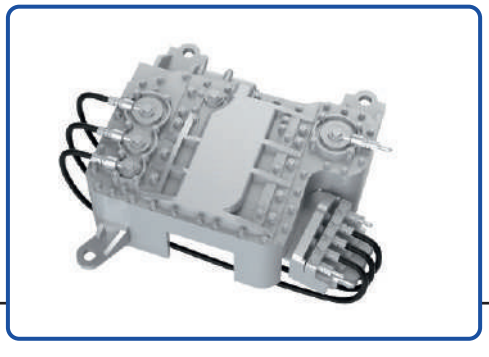

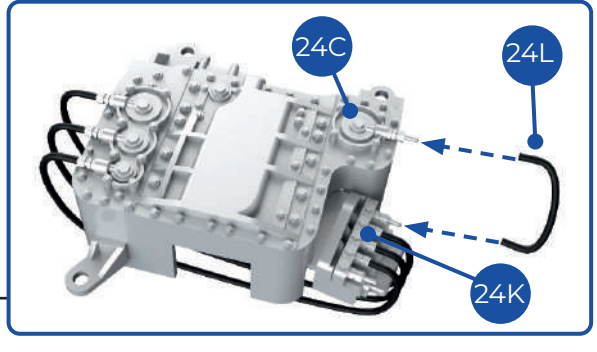

6

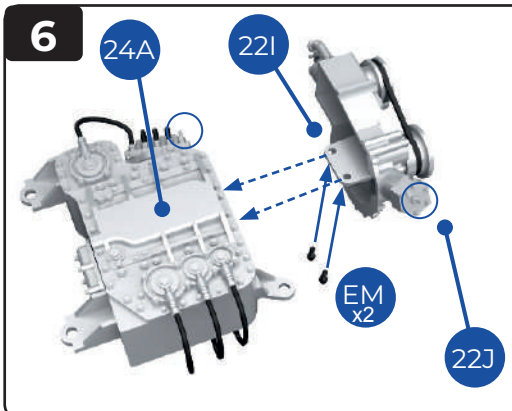

6 Take the drive unit housing assembled in stage 22. Fit the flange in part 22I into the recess in the gearbox casing 24A, as indicated by the dotted lines. Turn over and fix in place with two EM screws. Identify the fixing points (circled in the diagram on the left) for the final line 24B. Fit the last line in place. The diagrams on the right show the lines in place.

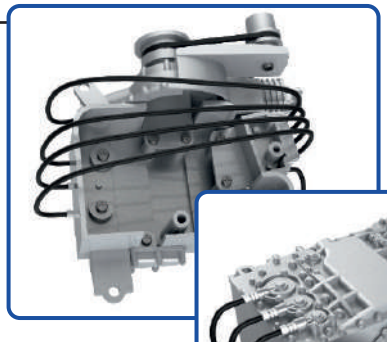

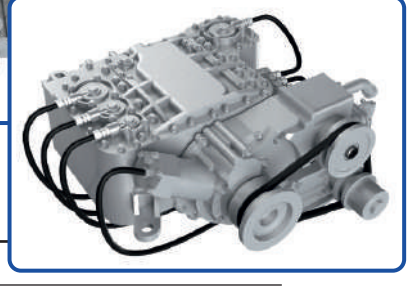

7

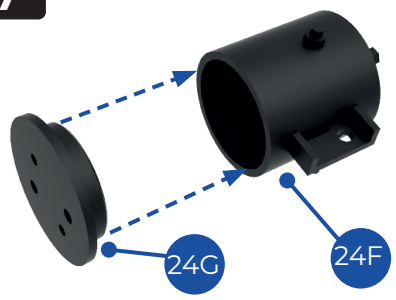

7 Fit the tank end 24G to the tank 24F. This is a push-fit connection. Fit parts 24I and 24H into the corresponding holes in the tank cap 24G, as shown in the inset, right. Again, these are push-fit connections. The pins on parts 24I and 24H are spaced differently to ensure you fit them correctly.

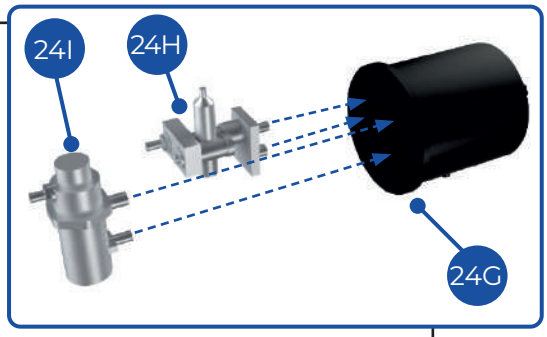

8

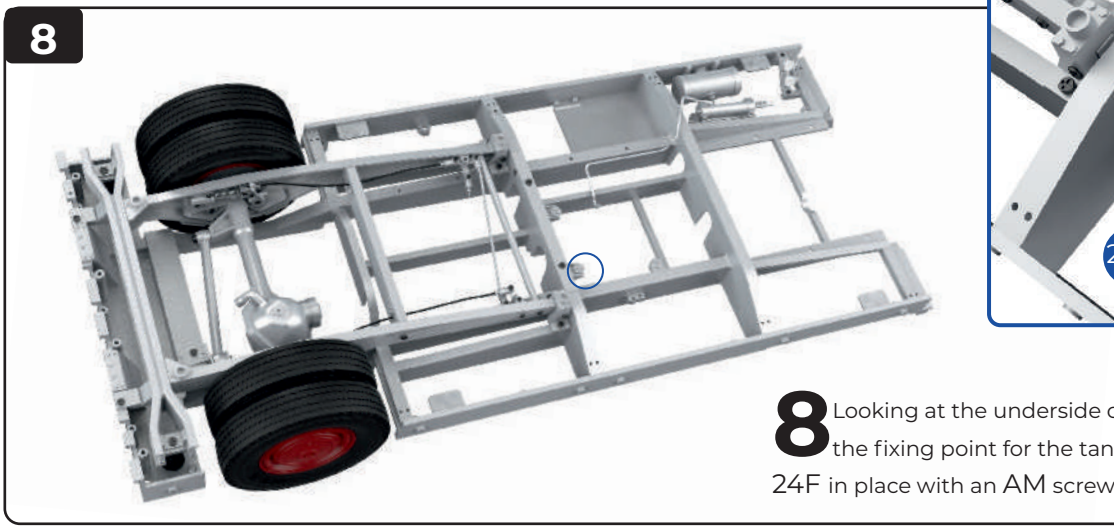

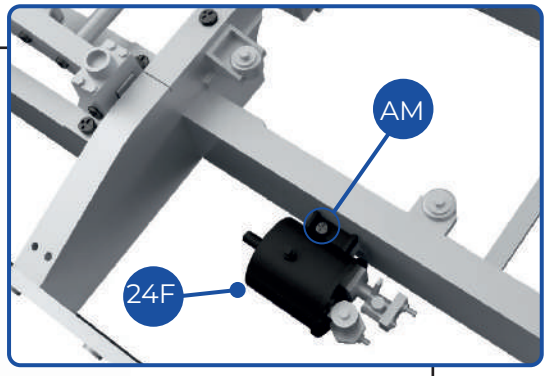

8 Looking at the underside of the sub-frame, identify the fixing point for the tank (circled). Fix the tank 24F in place with an AM screw, as shown in the inset.

9

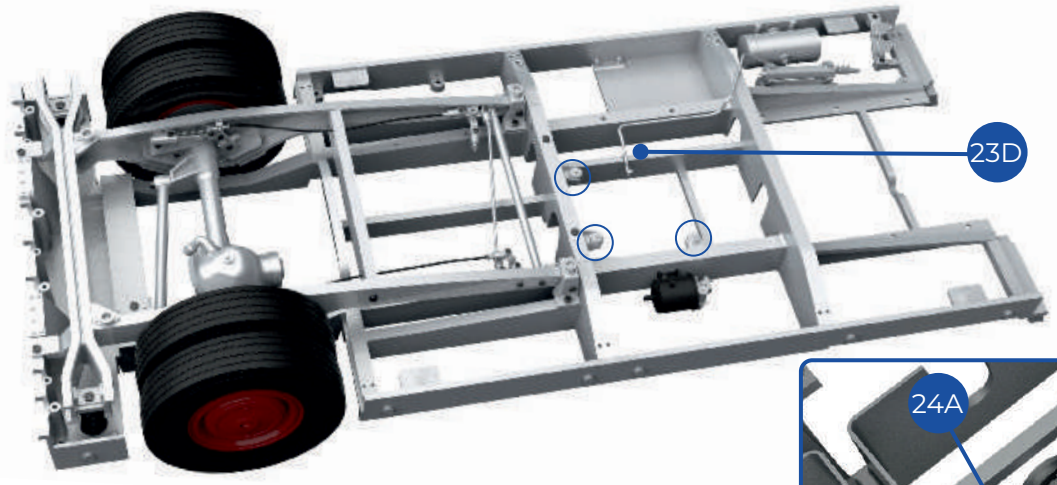

When fitting the gearbox casing, offer it up from below, but ensure the fixing tabs are in the correct positions, as shown in the diagram below.

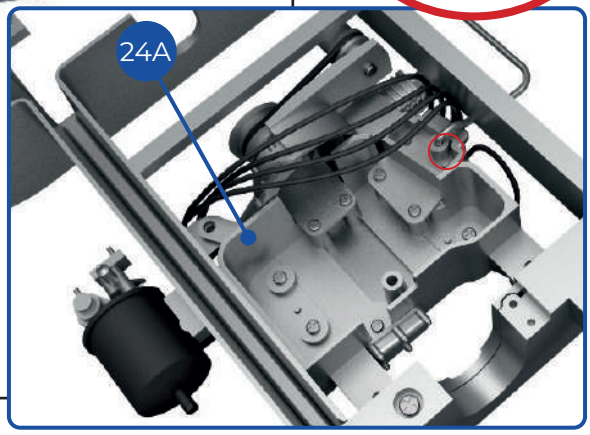

9 Identify the three fixing points for the gearbox casing 24A (circled, above, viewed from below). Note also the position of the end of the line 23D. Working with the sub-frame the right way up, position the gearbox casing, as shown on the right, with the screw eyelets aligned with the fixing points. The line 23D fits over the edge of the casing and the end goes into the socket in the casing (circled in red, right).

10

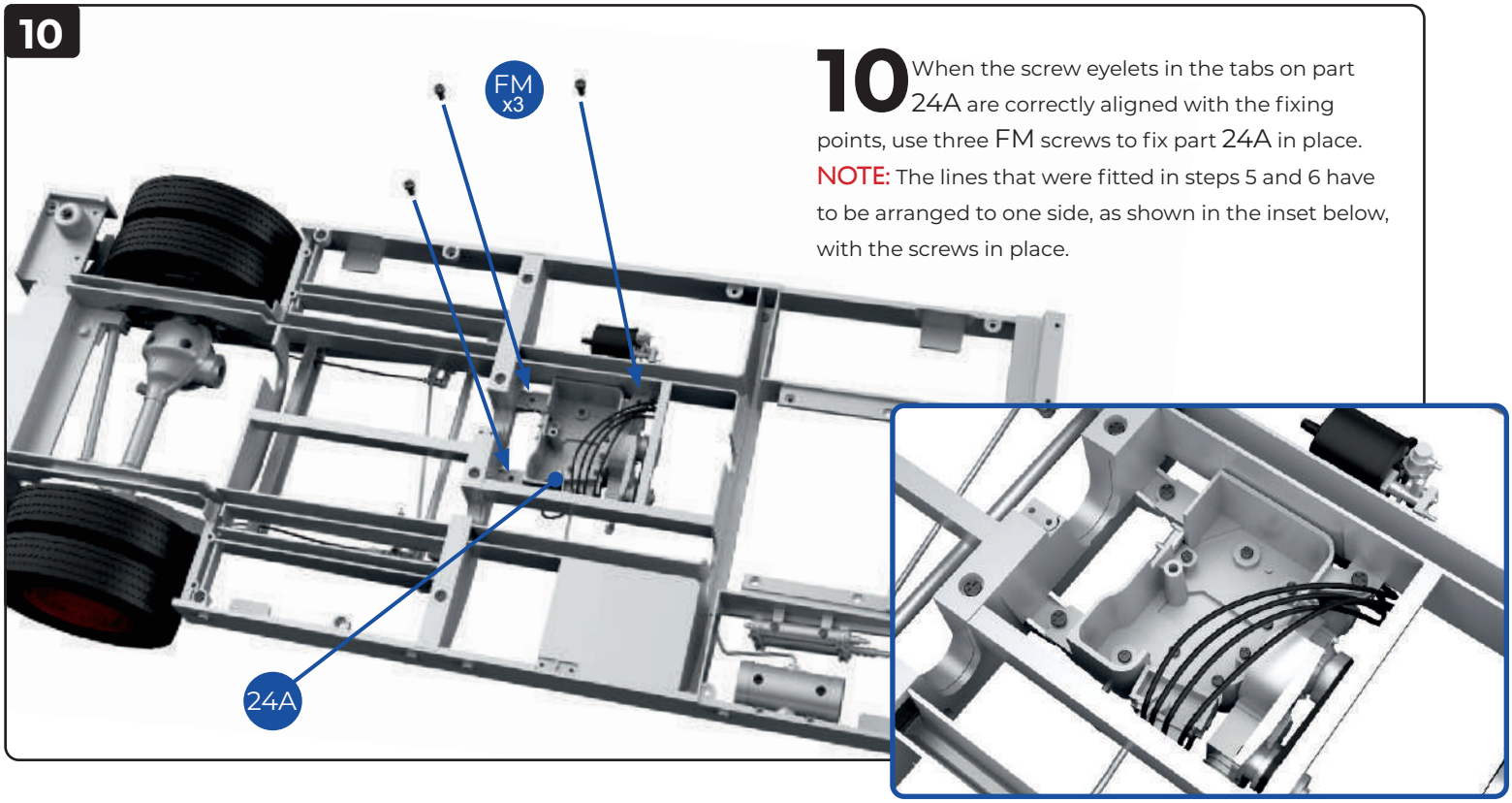

10 When the screw eyelets in the tabs on part 24A are correctly aligned with the fixing points, use three FM screws to fix part 24A in place. NOTE: The lines that were fitted in steps 5 and 6 have to be arranged to one side, as shown in the inset below, with the screws in place.

11

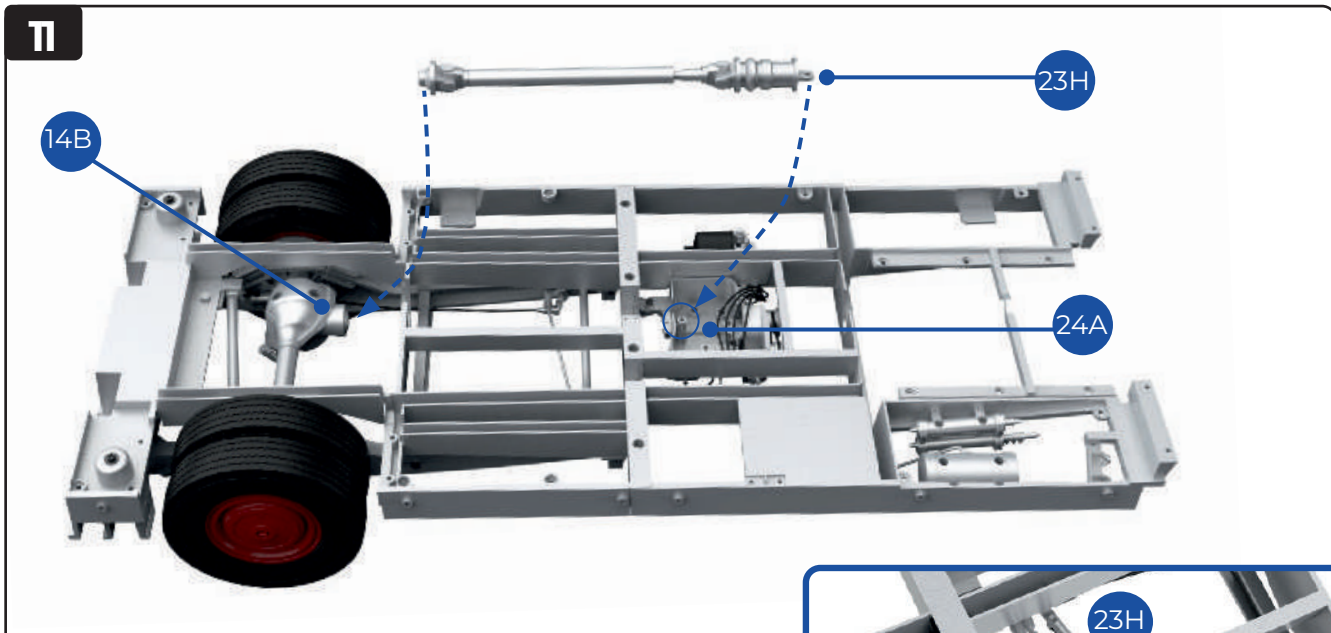

11 Check the fit of the prop shaft, 23H. The protrusion on one end fits into the socket in the differential 14B. The other end has an eyelet that aligns with a screw socket in part 24A. When you have the prop shaft in the correct position, use an FM screw to fix it in place at the eyelet end. The screw fixing is circled in the inset, right.

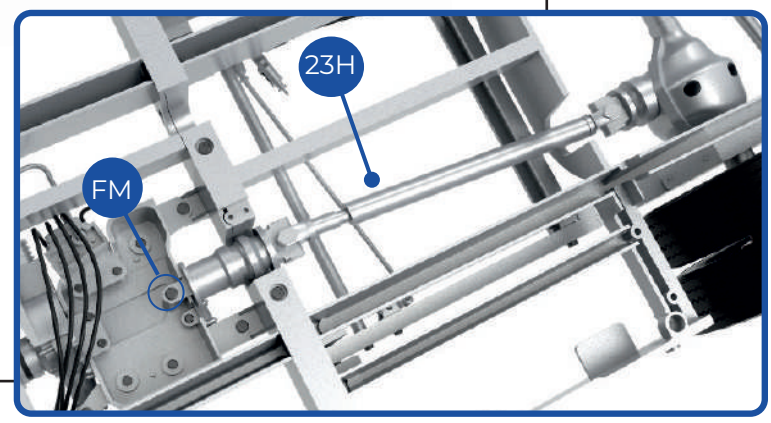

12

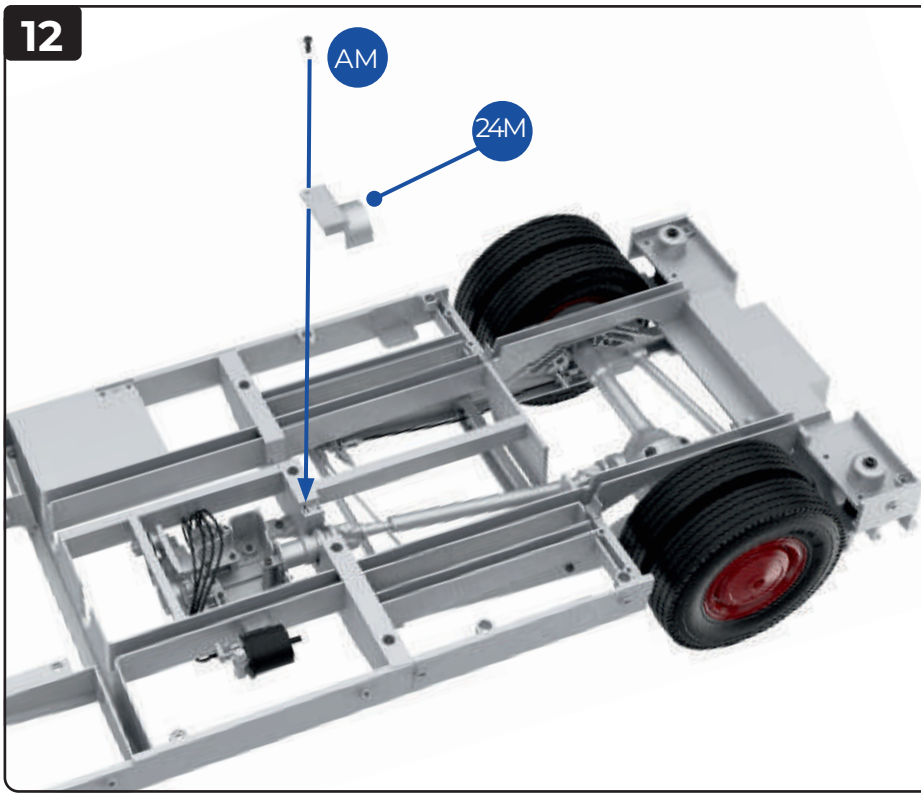

12 Take the cover 24M and check the fixing point near the end of the prop shaft 23H. Position part 24M over the opening in the sub-frame and fix in place with a single AM screw. The inset below shows the cover in place.

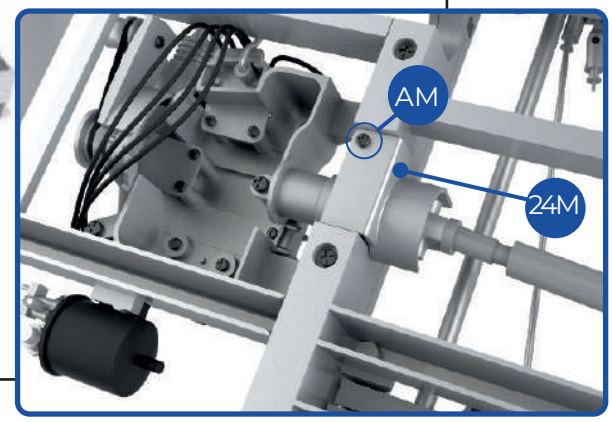

Finished views

The illustration on the right shows the upper side of the sub-frame; the illustration below shows the underside.

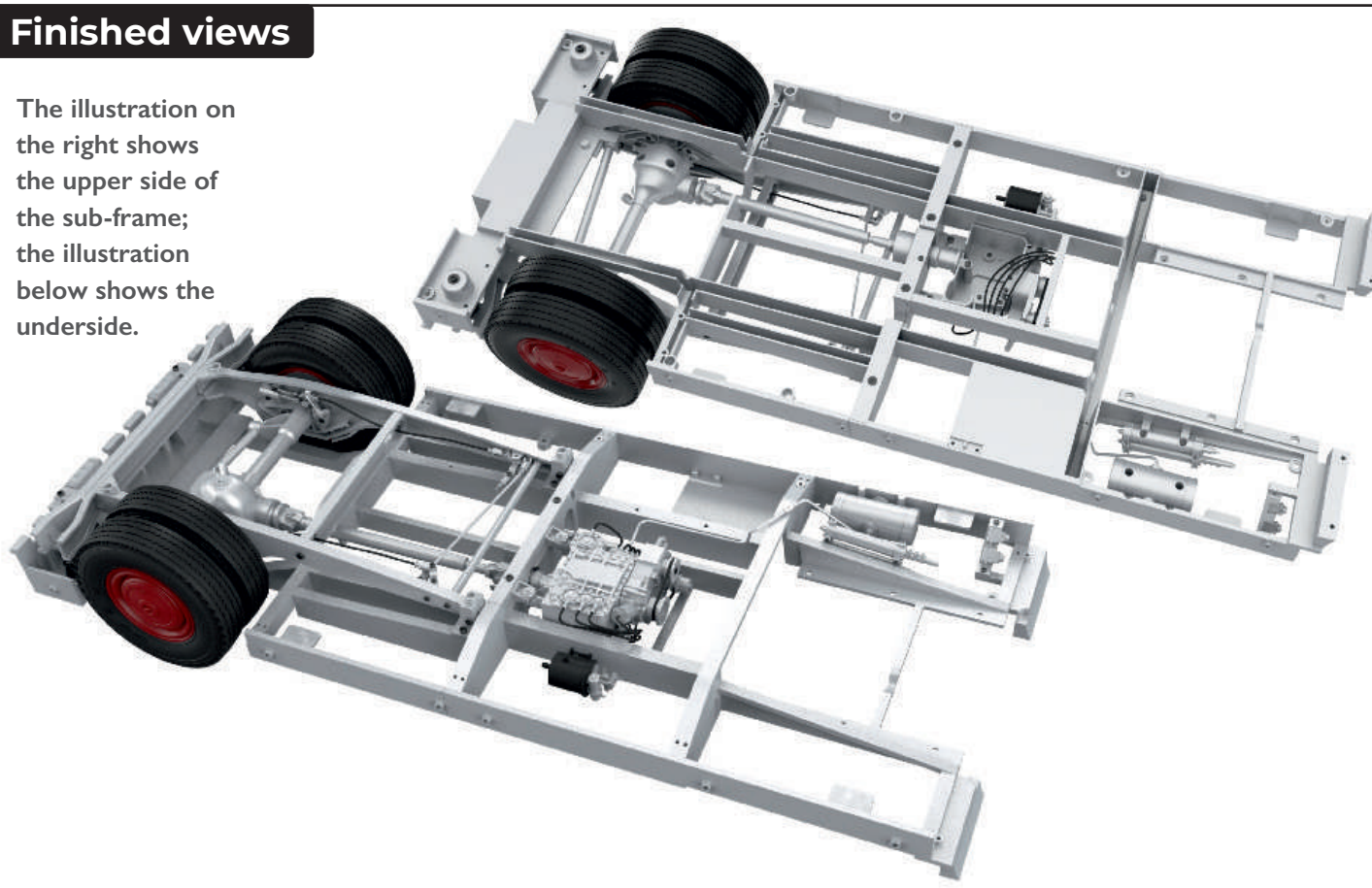

STAGE 25

EXHAUST MANIFOLD, CRANKCASE AND OIL SUMP

In this stage you will find the exhaust manifold. There are also parts for the oil sump, crankcase and a flywheel. Follow the instructions to assemble them.

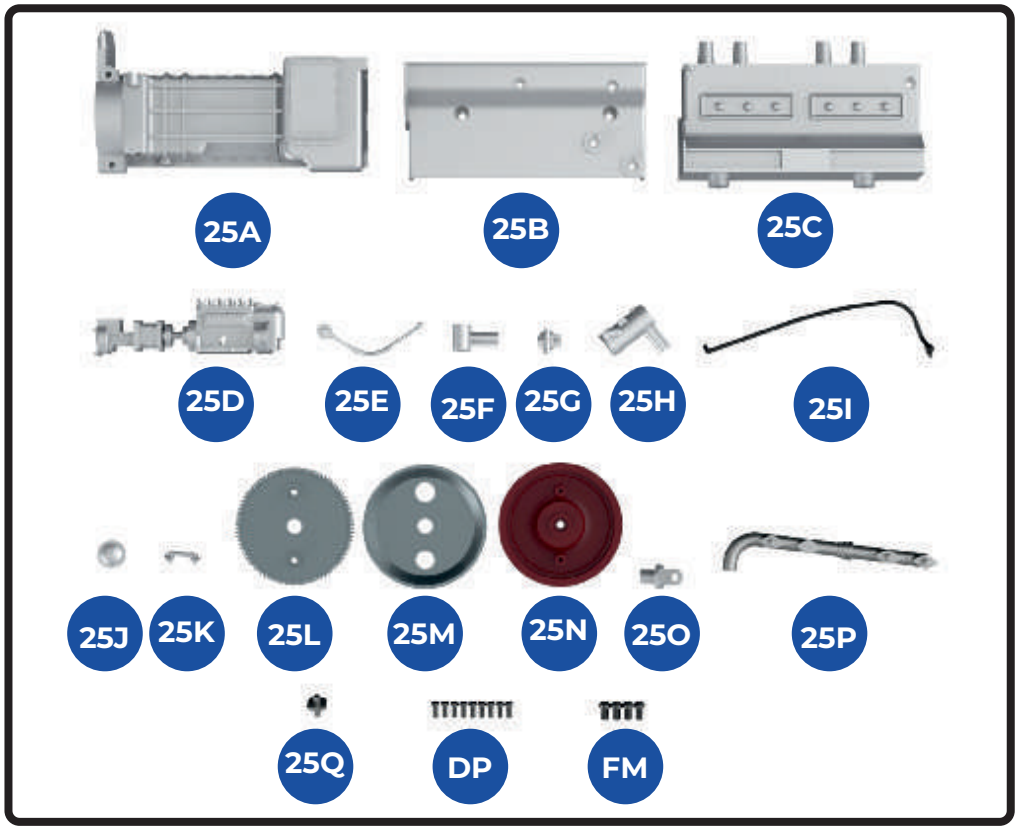

KEY TO PARTS SUPPLIED

25A	Oil sump
25B	Left crankcase
25C	Right crankcase
25D	Injection pump
25E	Fuel pipe
25F	Fuel filter
25G	Cap
25H	Steering fluid reservoir
25I	Power steering pipe
25J	Cap
25K	Steering fluid indicator
25L	Flywheel drive
25M	Flywheel
25N	Flywheel cover
25O	Shaft
25P	Exhaust manifold
25Q	Flange
DP	1.7 x 4mm (x9)
FM	2.3 x 4mm (x4)

1

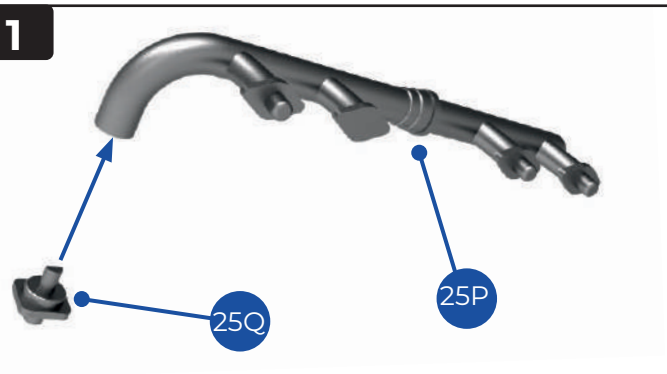

1 Fit the flange 25Q to the end of the exhaust manifold 25P. This is a push-fit connection.

Finished views

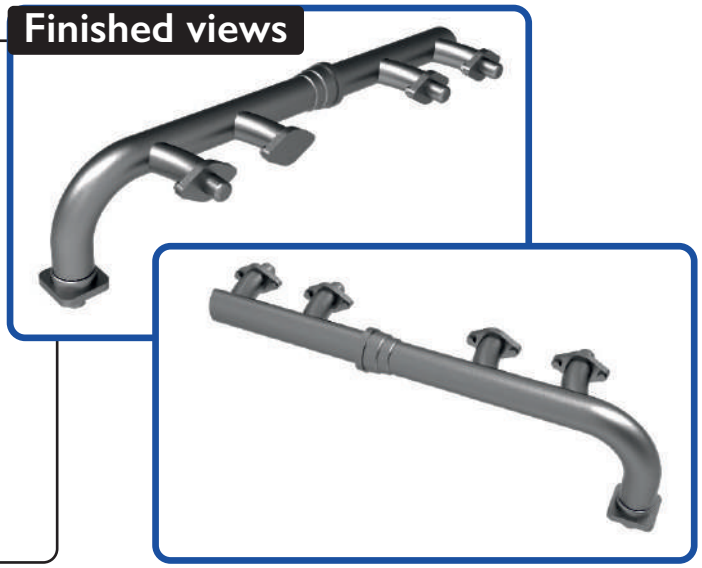

2

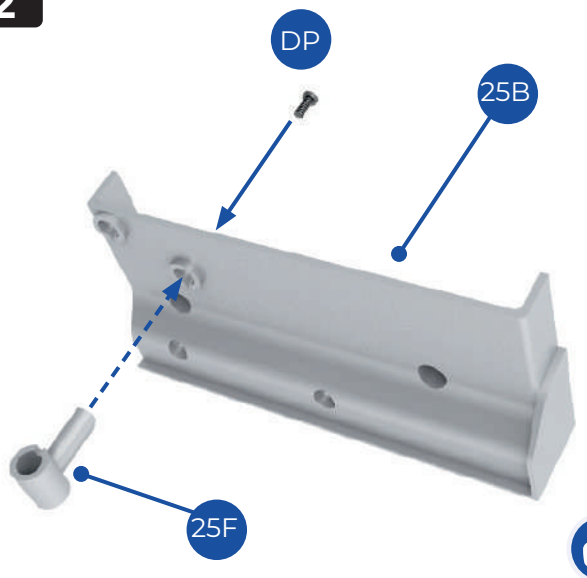

2 Fit the fuel filter 25F to the left crankcase 25B. The arm on the filter goes into the raised socket on the crankcase. Fix in place with a DP screw.

Study the diagrams and make sure you fit parts 25F and 25H in the correct sockets.

3

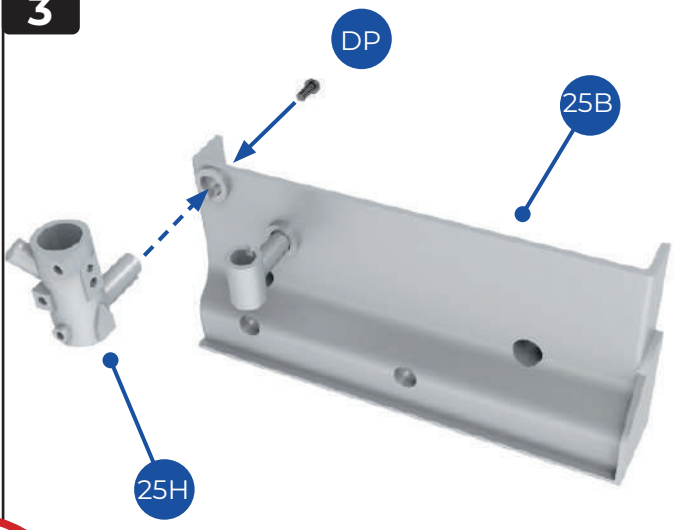

3 In a similar way, fit the steering fluid reservoir 25H to part 25B and fix in place with a DP screw.

4

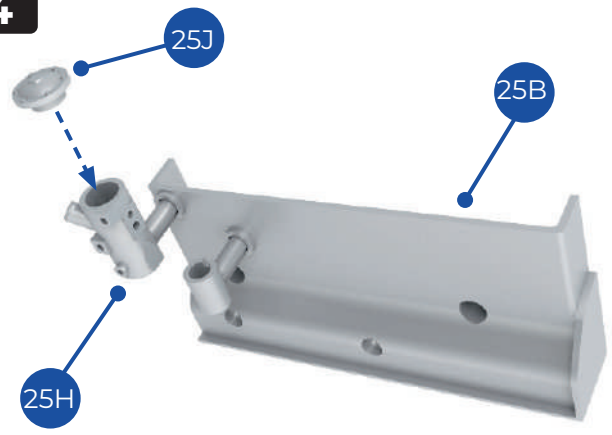

4 Fit the cap 25J on to the top of the steering fluid reservoir 25H. This is a push-fit connection.
Fit the steering fluid indicator 25K to the side of the reservoir 25H (see inset). Again, this is a push-fit connection.

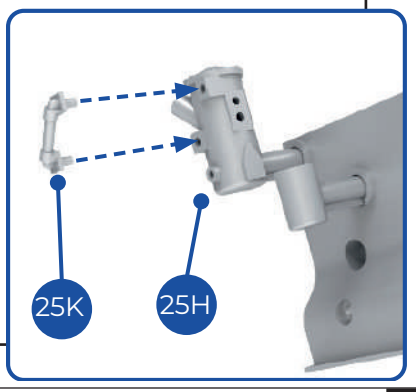

5

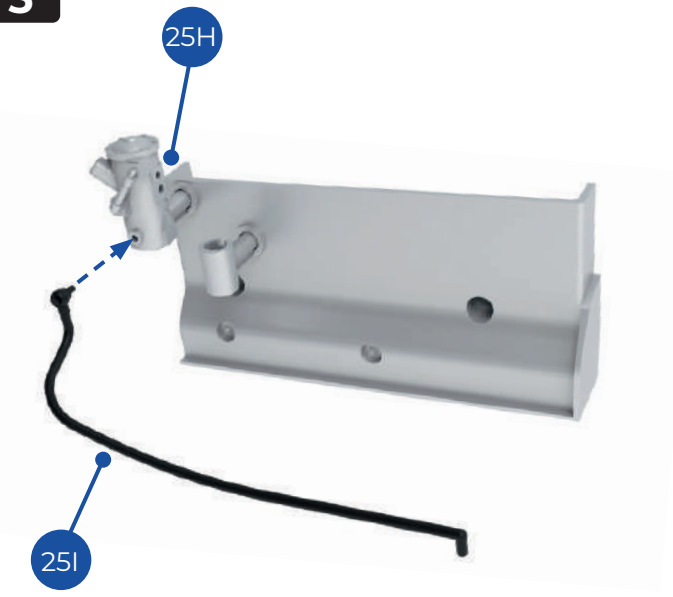

5 Fit the power steering fluid pipe 25I into the socket at the base of part 25H. This is a push-fit connection. It may be advisable to hold the pipe in place temporarily with a little masking tape.

6

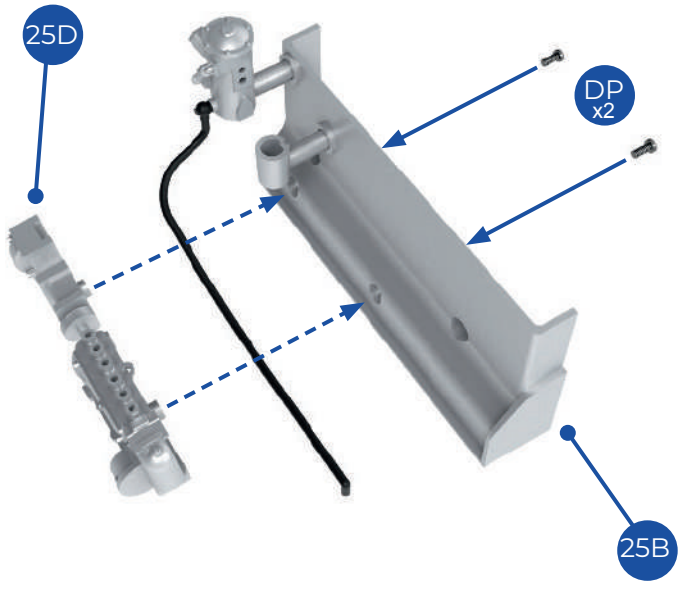

6 Take the injection pump 25D and test-fit it to the left crankcase 25B. Check that you have the correct orientation. There are two protruding screw sockets on part 25D that fit into corresponding holes on part 25B. When you have it in the correct position, fix in place with two DP screws. Fit the cap 25G into the top of the fuel filter 25F (see inset below).

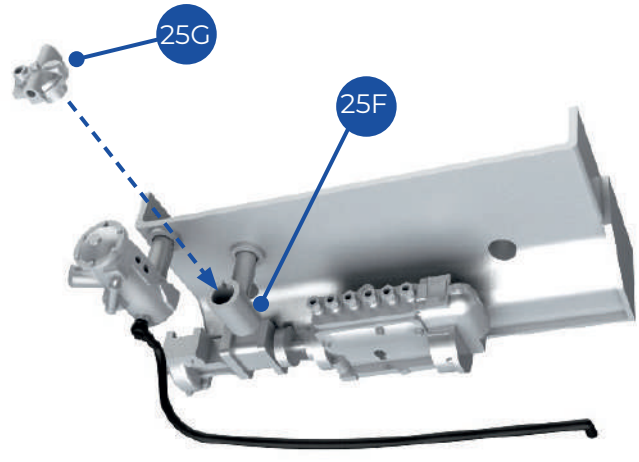

7

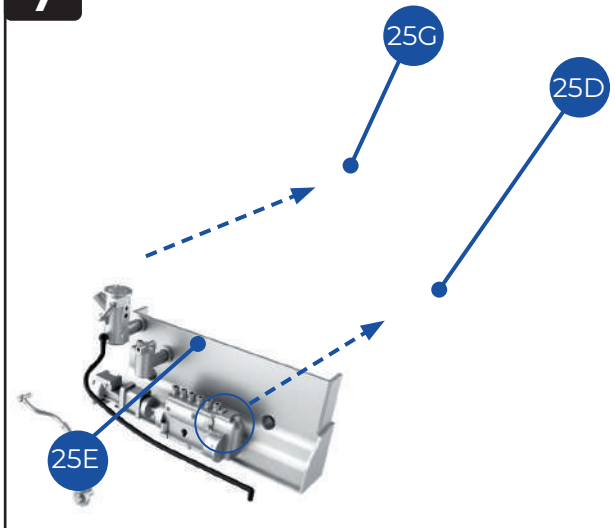

7 Take the fuel pipe 25E and test-fit it to the left crankshaft assembly. NOTE: The joint at one end of the fuel pipe (circled) is larger than the other – the larger end is attached to the injection pump 25D. The other end fits into the socket at the top of the fuel filter 25G. When you have the pipe in the correct position, push the ends into the sockets. They are push-fit connections.

Finished views

The left crankcase with fittings in place.

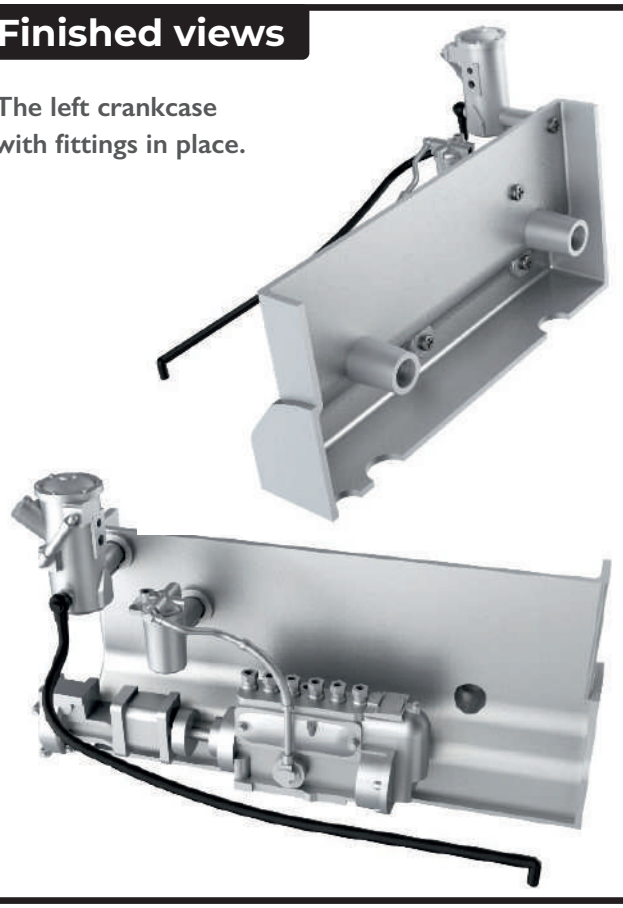

8

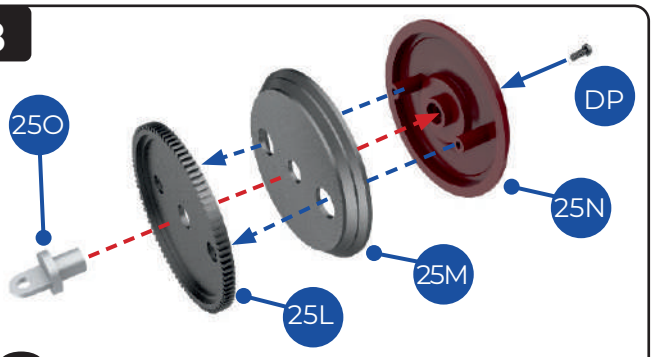

8 Take the three flywheel pieces 25L, 25M and 25N and check the orientation. When you have them aligned as shown in the diagram, push the three pieces together so that the screw sockets on part 25N fit through the corresponding holes in parts 25M and 25L. Then take the shaft 25O and fit it through the centre hole as shown (red dotted line). Use a DP screw to fix the shaft 25O in place. Finally fix the flywheel firmly together using two more DP screws (inset, right).

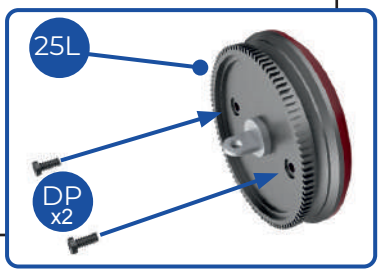

9

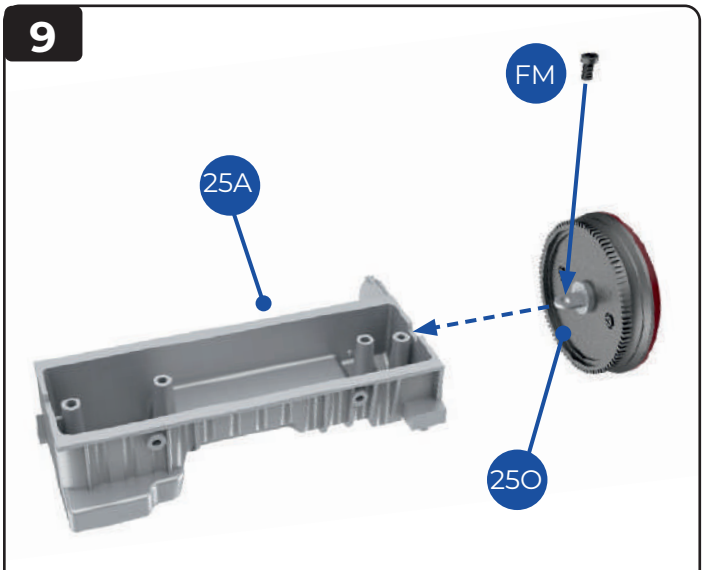

9 Check that the flywheel rotates on part 25O. If it is stiff, loosen the DP screw that was used to fit the flywheel parts to the shaft. Align the screw eyelet in part 25O with the screw socket at the end of the oil sump 25A. Fix in place with an FM screw.

10

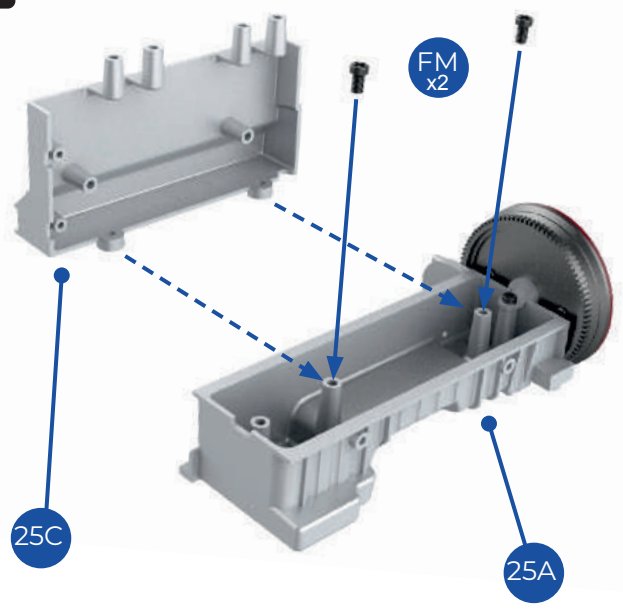

10 Align the tabs on the right crankcase 25C with the sockets at the centre of the oil sump 25A. When they are correctly positioned, fix in place with two FM screws.

Finished views

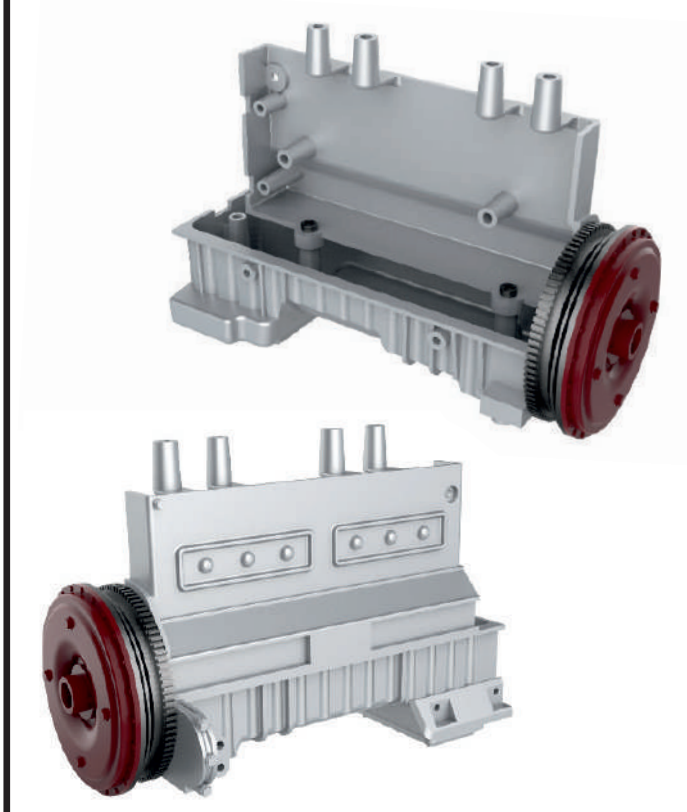

Assembly guide

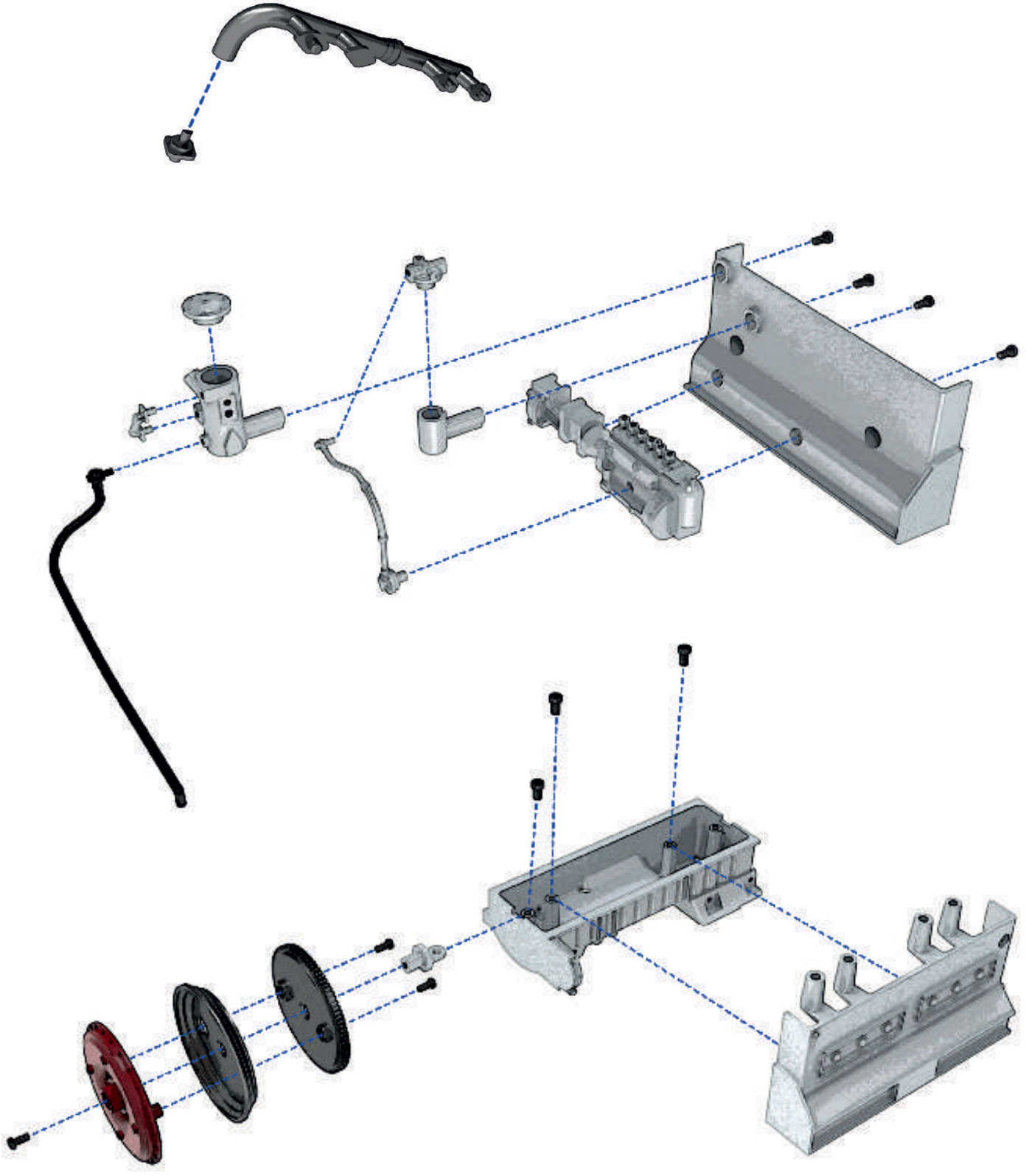

STAGE 26

ASSEMBLING THE CRANKCASE

Further parts are fitted to the sides of the crankcase. The two sides are joined and topped with cylinder heads.

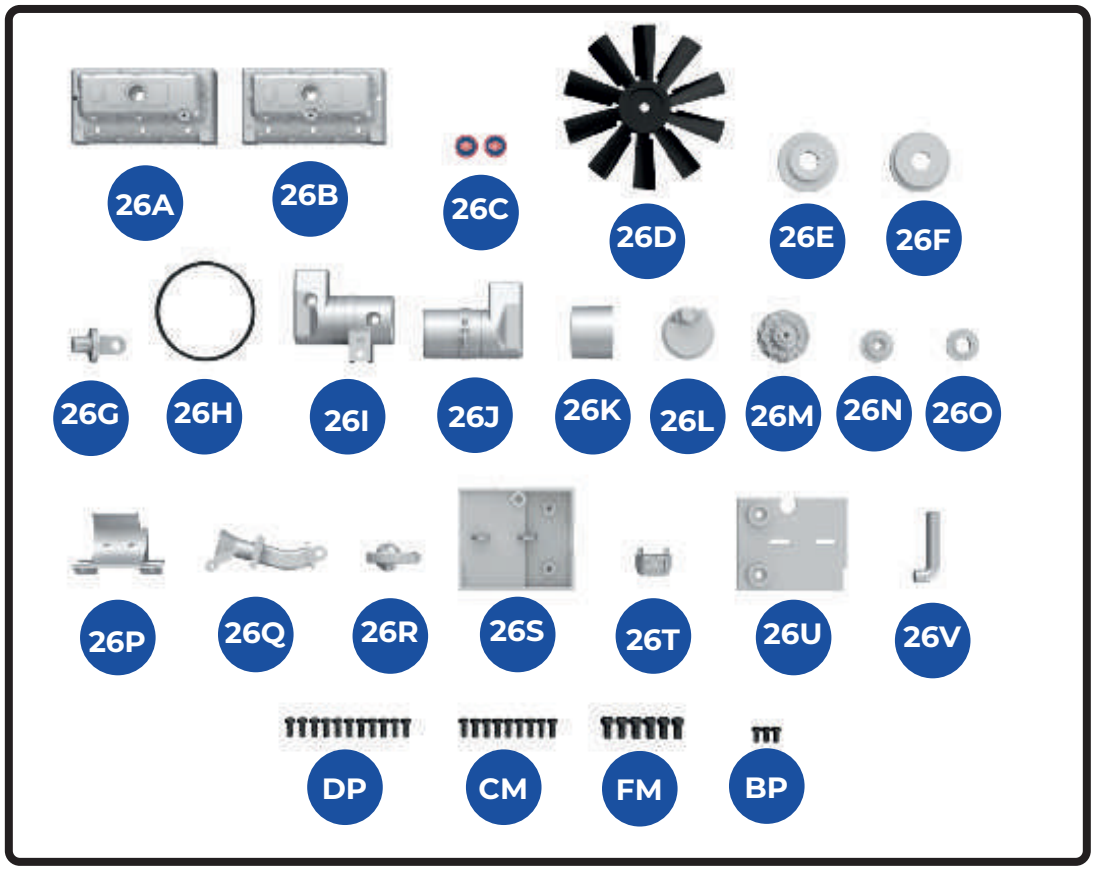

KEY TO PARTS

26A Cylinder head
26B Cylinder head
26C AEC logo stickers
26D Fan
26E **26F** Pulley parts
26G Fan mounting axle
26H Belt
26I Starter motor
26J Starter motor
26K Alternator
26L Alternator cover
26M Alternator front
26N **26O** Pulley parts
26P Alternator cradle
26Q Oil filler neck
26R Oil filler cover
26S Front housing
26T Connector
26U Back plate
26V Stub pipe

DP 1.7 x 4mm (x11)
CM 1.7 x 4mm (x9)
FM 2.3 x 4mm (x9)
BP 1.5 x 3mm (x3)

1

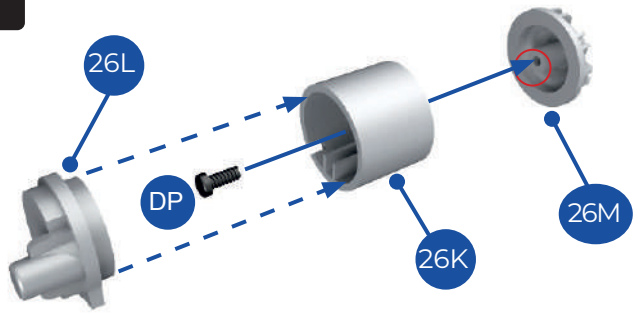

1 Take the alternator 26K and fit the front 26M to the closed end so that the raised screw socket (circled) fits in the hole in part 26K. Fix in place with a DP screw. Fit the alternator cover 26L to the open end. This is a push-fit connection.

2

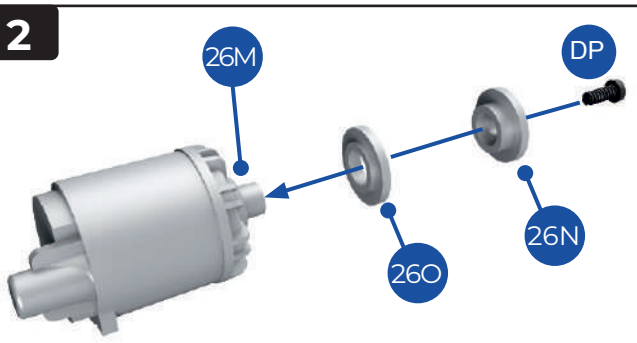

2 Take the two small pulley parts, 26O and 26N and check that you have them the right way round. Fit part 26O onto the raised screw socket on the alternator front 26M. Fit part 26N over part 26O. Fix in place with a DP screw.

3

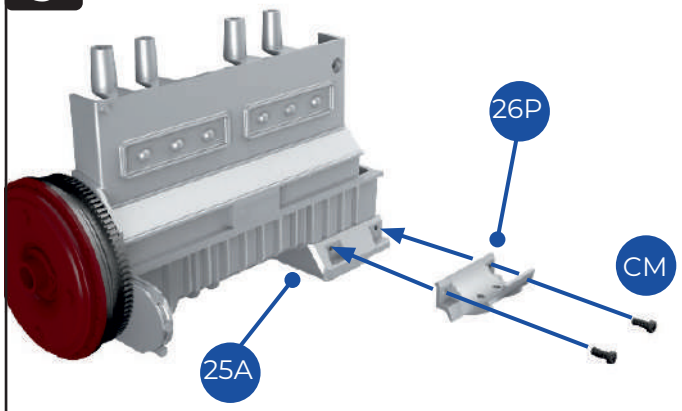

3 Take oil sump (25A) and crankcase assembly from the previous stage. Fit the alternator cradle 26P to the base of the oil sump and fix in place with two CM screws.

4

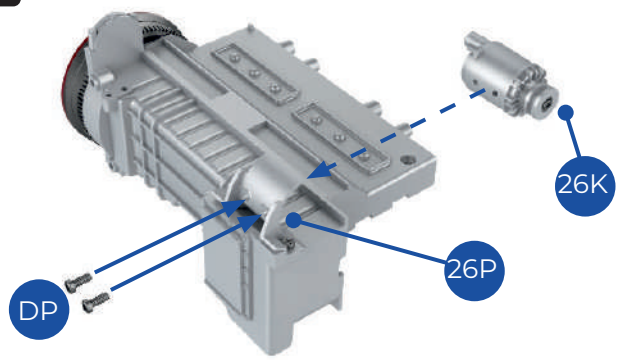

4 Position the alternator 26K in the cradle 26P so that the screw sockets are aligned. Turn the crankcase on its side as shown and fix the alternator in place with two DP screws.

5

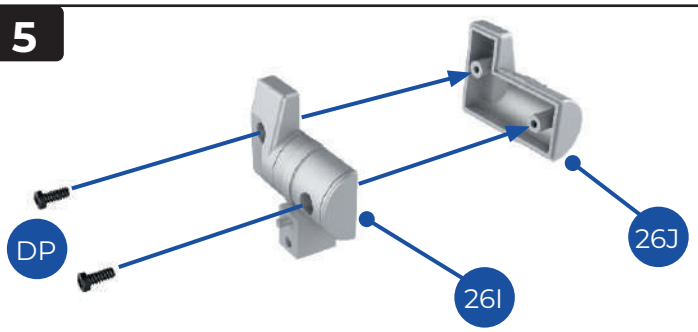

5 Take the two parts of the starter motor, 26I and 26J. Check the fit. When the two parts are correctly aligned, fix them together with two DP screws.

6

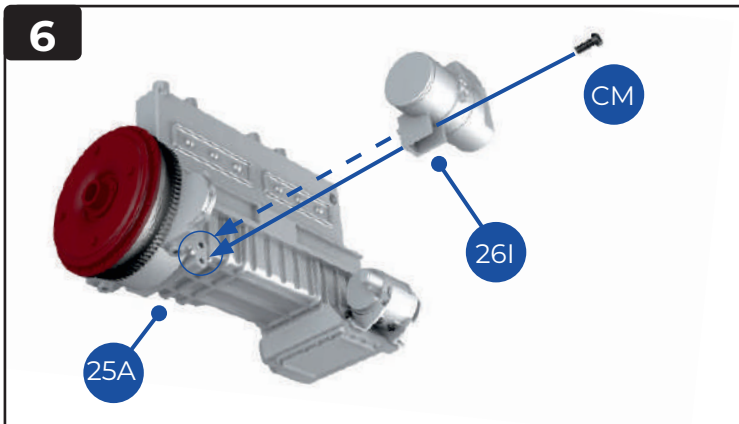

6 Identify the two holes for the starter motor (circled on part 25A). Fit the peg on the starter motor support bracket into the upper hole on part 25A so that the screw hole on part 26I is aligned with the hole on part 25A. Fix in place with a CM screw. The inset shows the assembly so far.

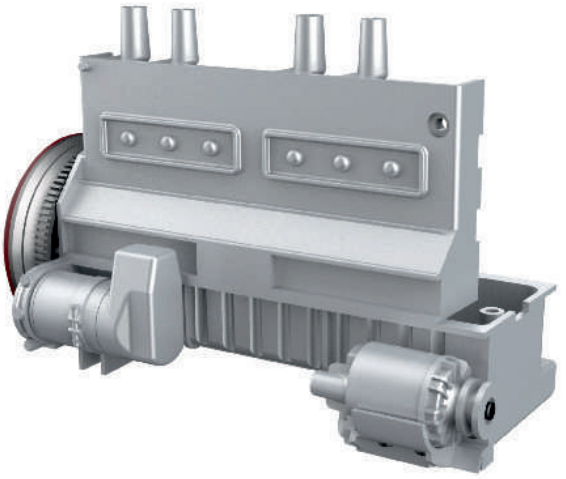

7

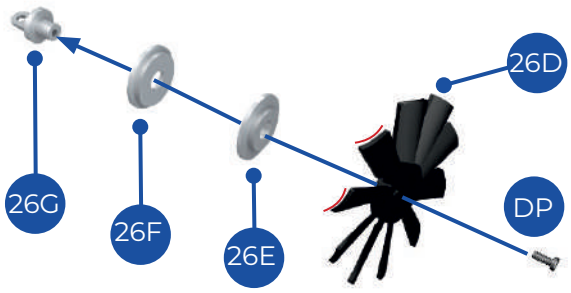

7 Take the fan mounting axle 26G and the two pulley parts 26F and 26E. Fit part 26F on part 26G and then fit part 26E on top of part 26F, checking that you have the pulley parts oriented correctly. Fit the fan 26D over the pulley, with the concave sides of the fins (indicated by red lines) facing the pulley. Fix in place with a DP screw.

8

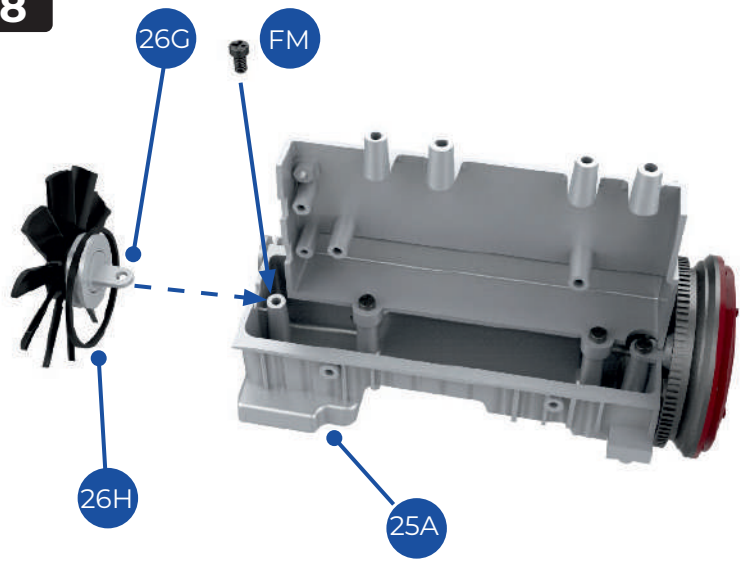

8 Fit the belt 26H over the pulley formed by parts 26E and 26F. Position the screw eyelet on the end of part 26G over the screw socket on part 25A, as indicated by the dotted line. Fix in place with an FM screw. When the fan is in place, stretch the belt 26H over the small pulley formed by parts 26O and 26N on the end of the alternator, as shown, right.

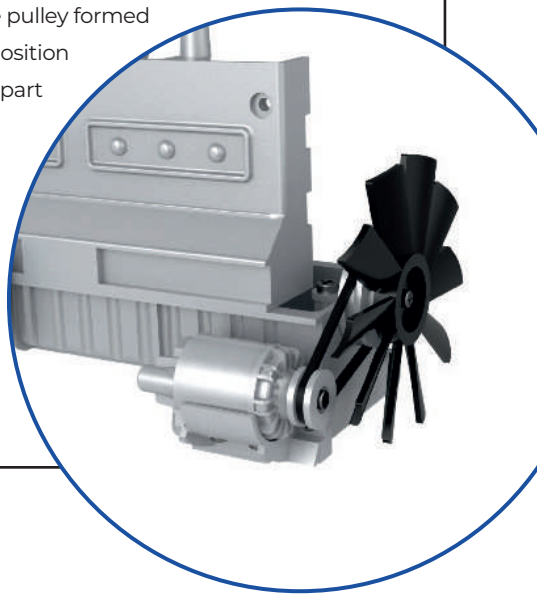

9

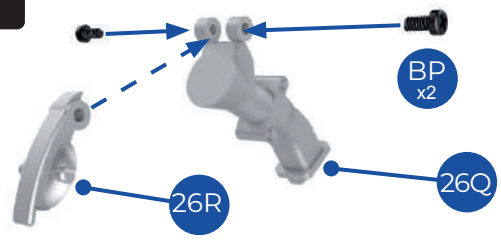

9 Fit the screw socket tab on oil filler cover 26R between the eyelets on the oil filler neck 26Q, checking that you have the correct orientation. Fix in place with two BP screws. Do not overtighten.

10

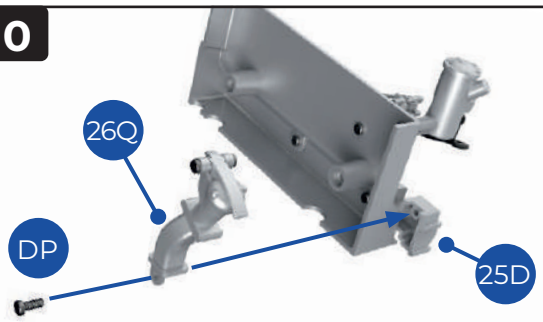

10 Take the left crankcase assembly from the previous stage and identify the fixing point for the oil filler neck 26Q on the injection pump 25D. Fix in place with a DP screw.

11

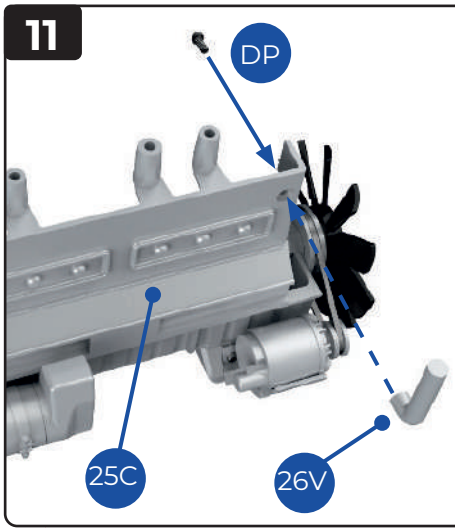

11 Fit the end of the stub pipe 26V into the socket in the right crankcase 25C. Fix in place with a DP screw.

12

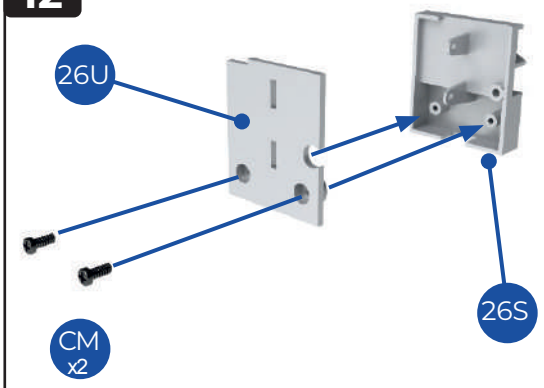

12 Take the back plate 26U and the front housing 26S and fit the parts together as shown. Fix in place with two CM screws.

13

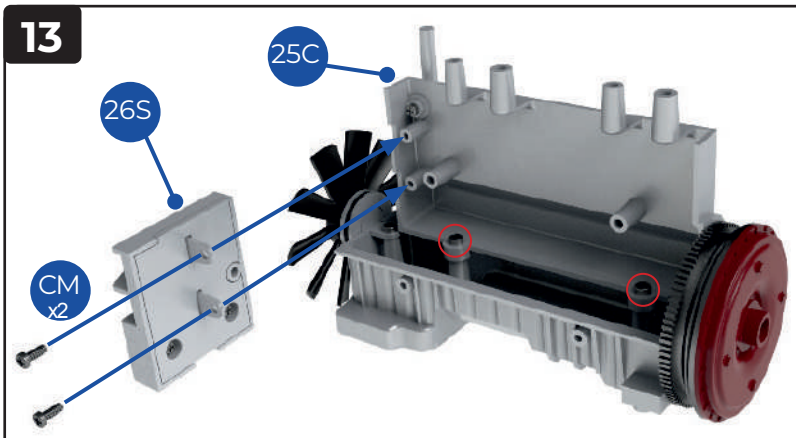

13 Align the two eyelets on the front housing 26S with the screw sockets near the fan on the crankcase 25C. Fix in place with two CM screws.

You may find it helpful to first loosen the FM screws fitted in step 10 of stage 25 (circled in red). Then once part 26S has been fitted securely in place, re-tighten the screws.

14

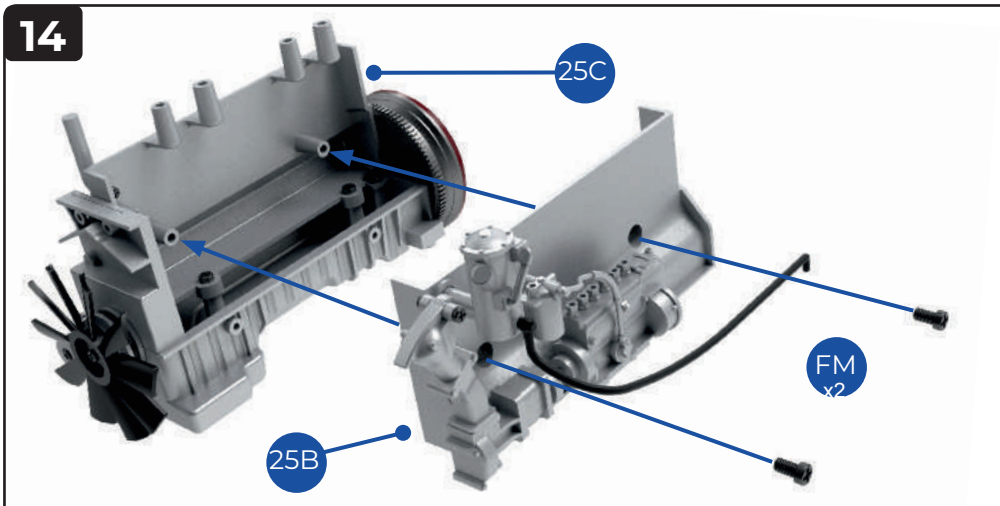

14 Take the left and right crankcase assemblies (25C and 25B). Fit them together as shown, and fix in place with two FM screws.

Do not overtighten the screws for the cylinder heads until you have fitted part 26T in the next step.

15

15 Take the cylinder head 26A and fit it over the raised screw socket and peg at the top of the crankcase. Fix in place with an FM screw. Repeat the process to fit the second cylinder head 26B.

NOTE: The cylinder heads are not the same. In particular, there is a different arrangement of screw holes around the rim (outlined, see also next step). Make sure that you fit the right one in the right place.

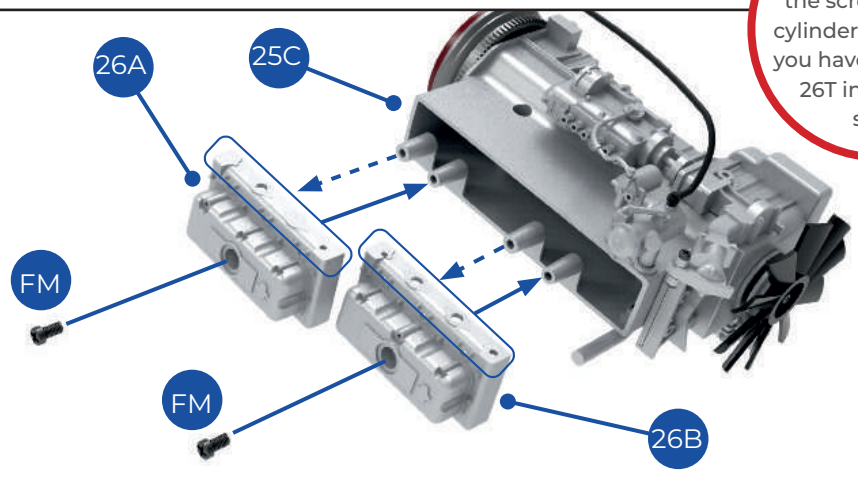

16

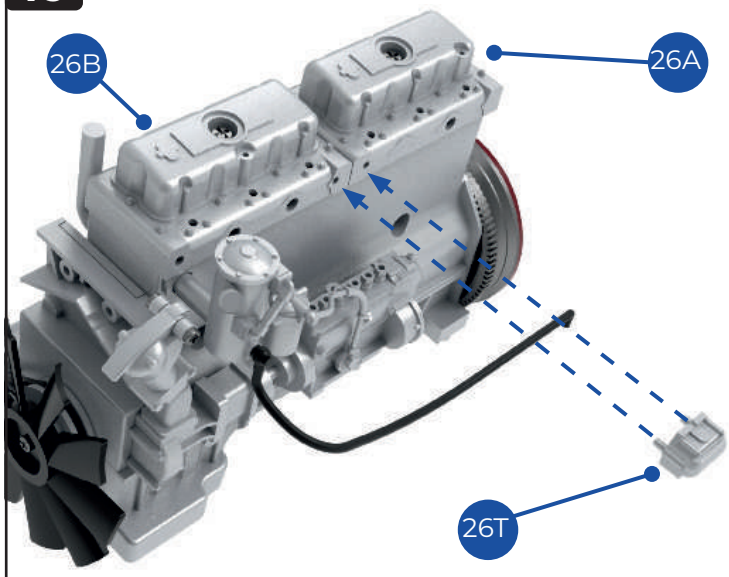

16 Fit the two pegs on the connector 26T into the corresponding sockets on the inner corners of parts 26B and 26A. These are push-fit connections. When part 26T is fitted, tighten the FM screws holding the cylinder heads in place.

17

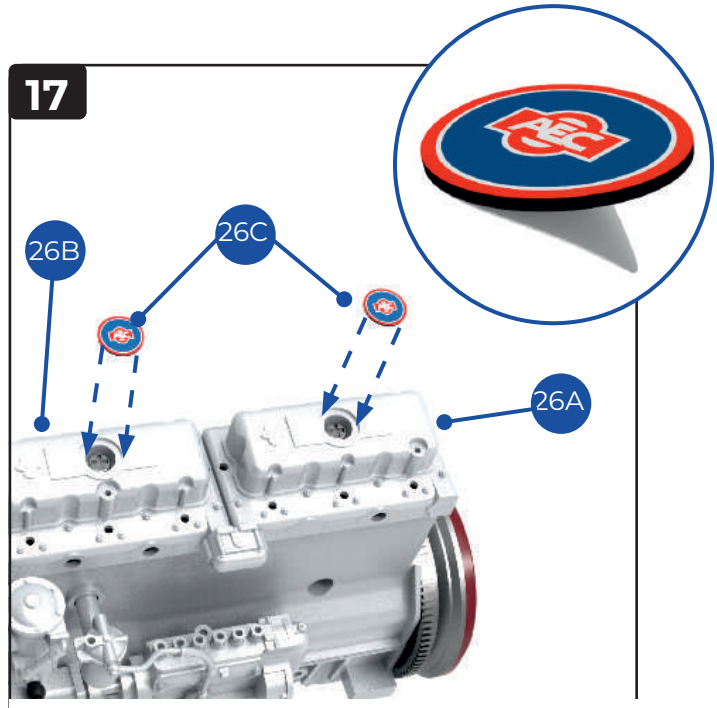

17 Peel the backing paper of the first AEC logo sticker 26C. Stick it in place in the recess in the cylinder head 26A, so that the screw head is covered. Repeat the process to stick the second logo sticker in place on top of part 26B.

Finished views

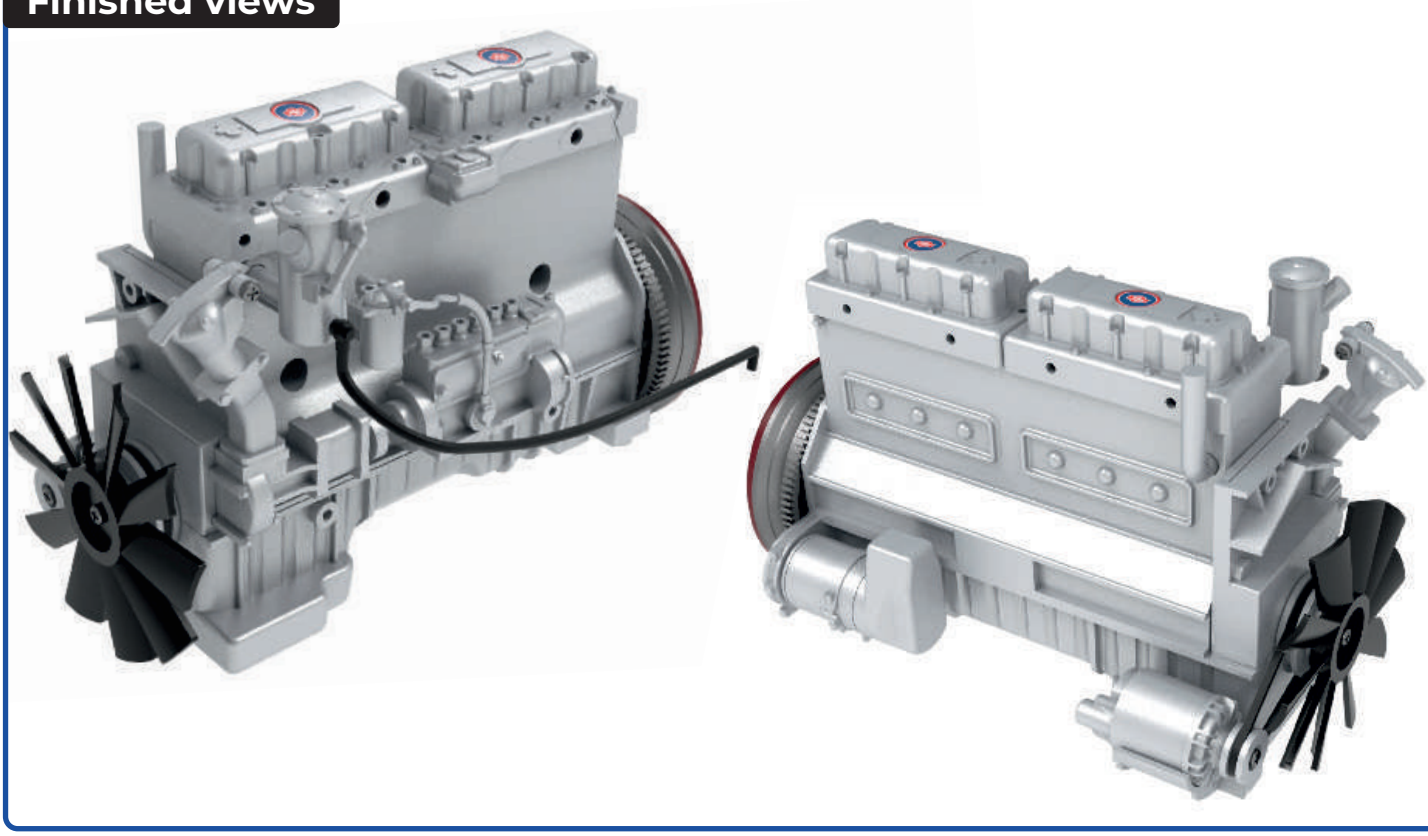

STAGE 27

FITTING THE FRONT SUBFRAME AND FRONT AXLE

The beams of the front part of the subframe are fitted to the rear subframe. The front axle is fitted between the beams of the front subframe.

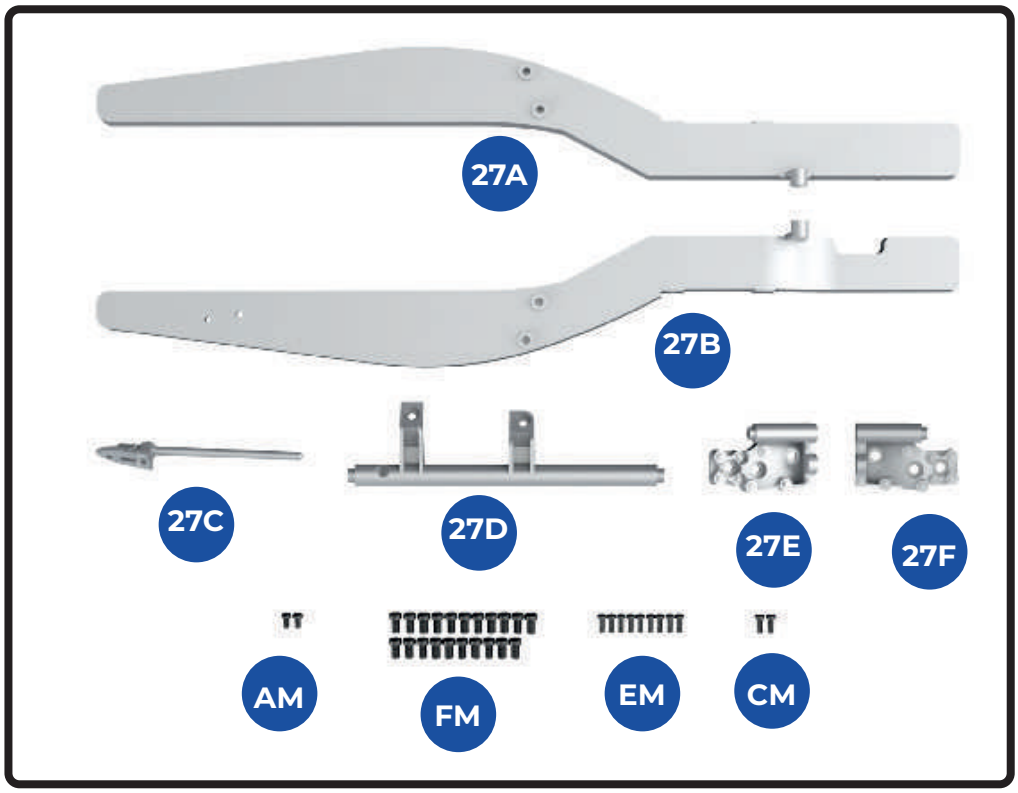

KEY TO PARTS SUPPLIED

27A	Left beam
27B	Right beam
27C	Steering bar
27D	Cross rod
27E	Left mounting
27F	Right mounting
AM	1.7 x 3mm (x2)
FM	2.3 x 4mm (x21)
EM	1.5 x 4mm (x9)
CM	1.7 x 4mm (x2)

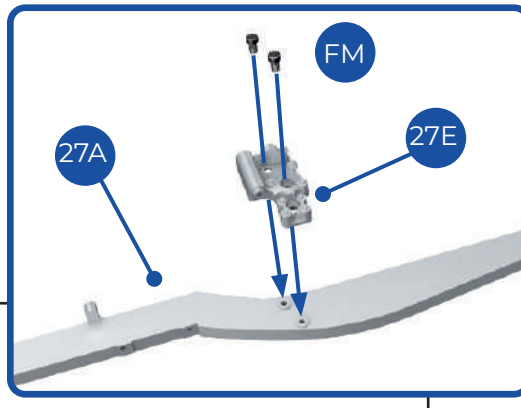

1

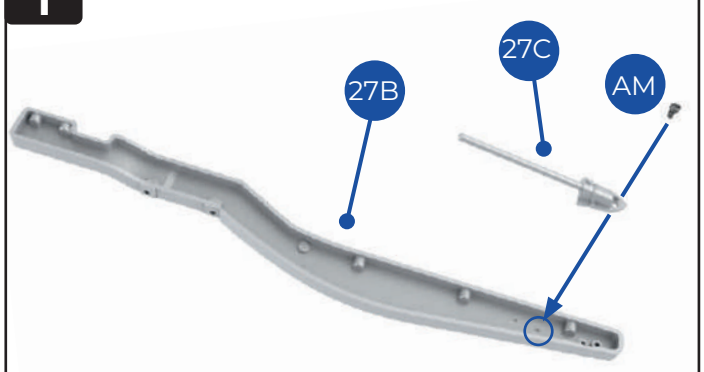

1 Take the right beam 27B and identify the fixing point for the steering bar 27C (circled). Fix in place with an AM screw.

2

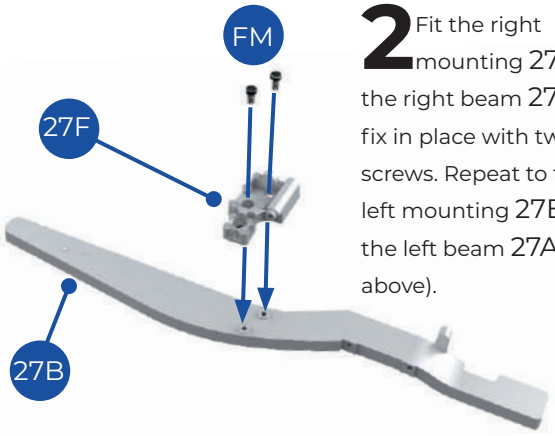

2 Fit the right mounting 27F to the right beam 27B and fix in place with two FM screws. Repeat to fit the left mounting 27E to the left beam 27A (inset, above).

3

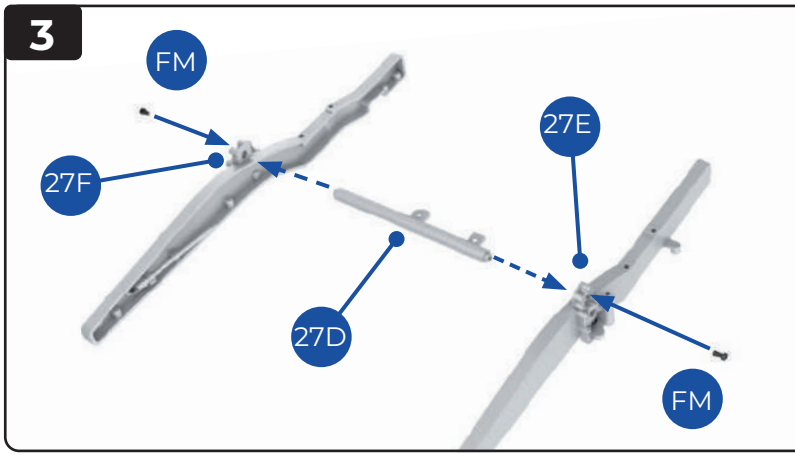

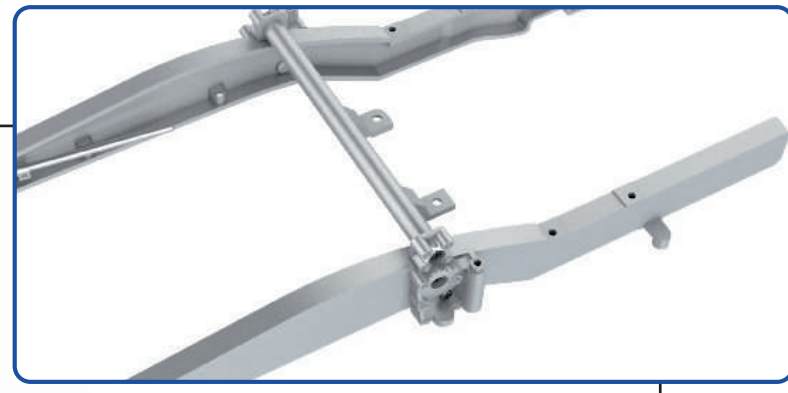

3 Fit the cross rod 27D between the left mounting 27E and the right mounting 27F. Fix in place with two FM screws. The inset above shows the cross rod in place.

4

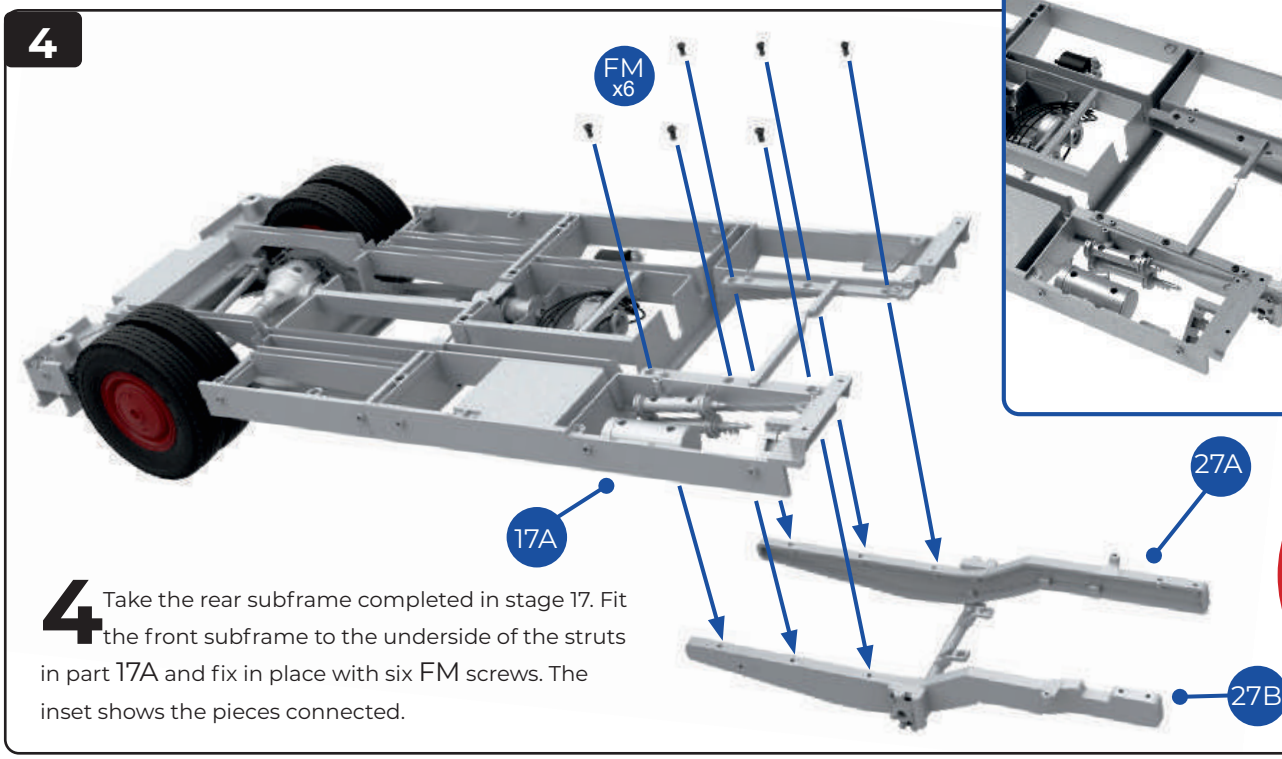

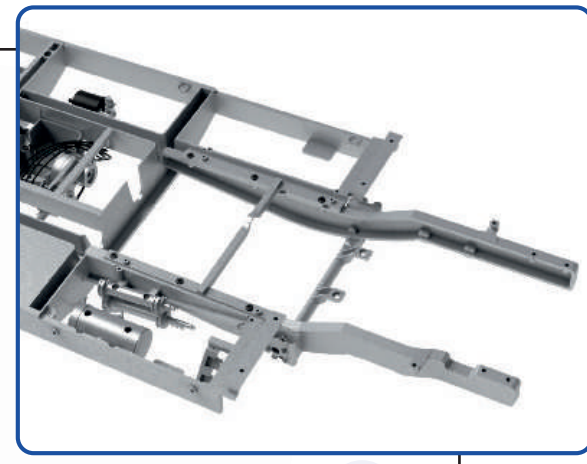

Insert the FM screws one at a time, and half-tighten each one. When all are fitted they can be fully tightened.

4 Take the rear subframe completed in stage 17. Fit the front subframe to the underside of the struts in part 17A and fix in place with six FM screws. The inset shows the pieces connected.

5

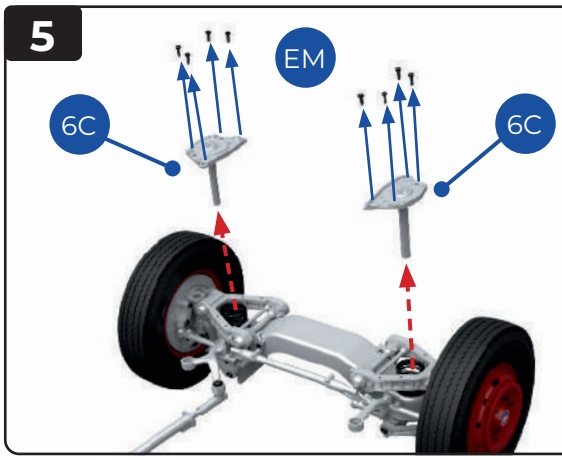

5 Take the front axle and steering mechanism, completed in stage 11. Identify the shock absorber fixtures 6C, fitted in stage 6. Remove the eight EM screws holding the fixtures in place, and remove the shock absorber fixtures as indicated by the red arrows.

6

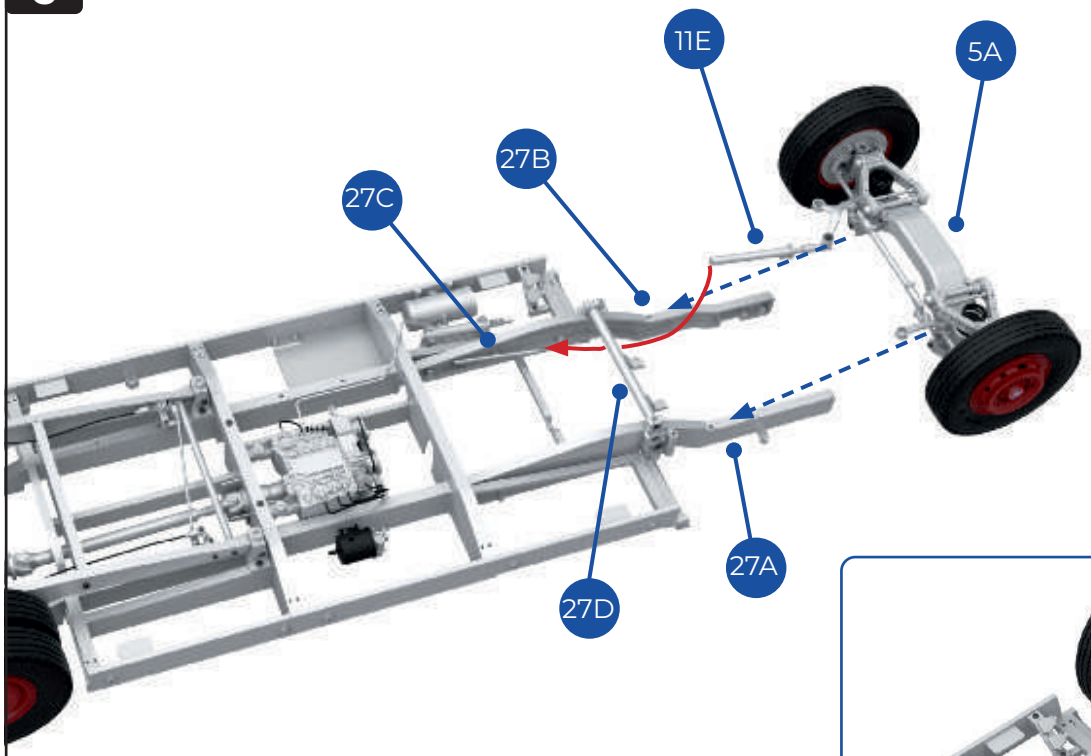

6 Turn the subframe over to fit the front axle assembly. The suspension arm 5A sits on top of the beams 27A and 27B. However, at the same time, pass the steering bar 11E under the cross rod 27D and insert the end of the steering drive 27C into the hollow end of part 11E. The inset below shows the axle in place, with the fitting of the steering drive circled in red.

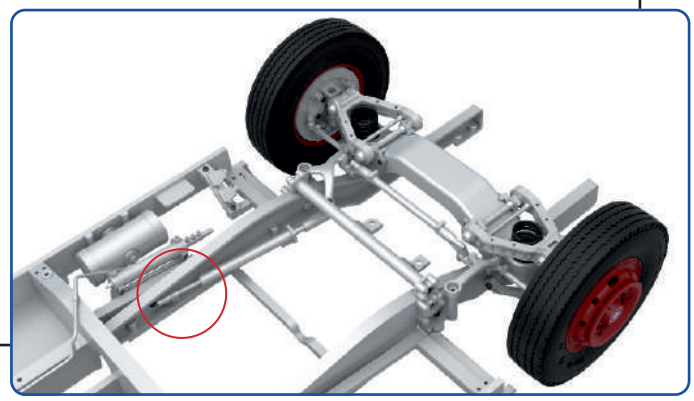

7

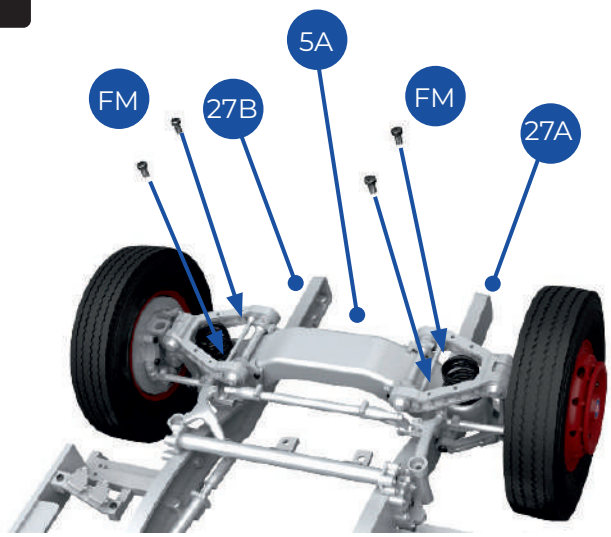

7 When you have the suspension arm 5A in the correct position, fix it to the beams 27A and 27B with four FM screws. The insets show the same fixing in close up from another angle, with the FM screws circled in red.

8

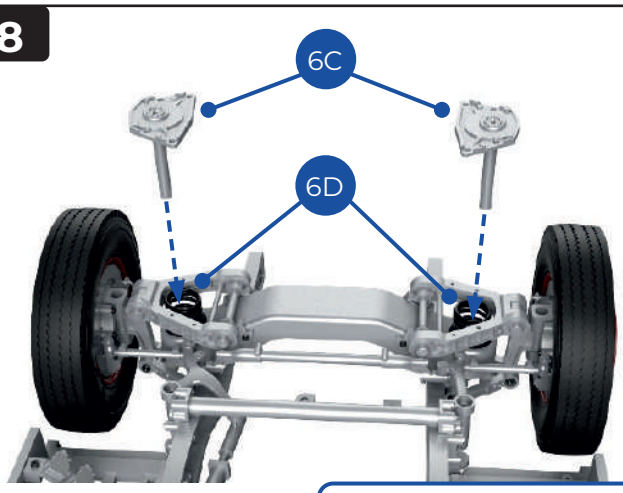

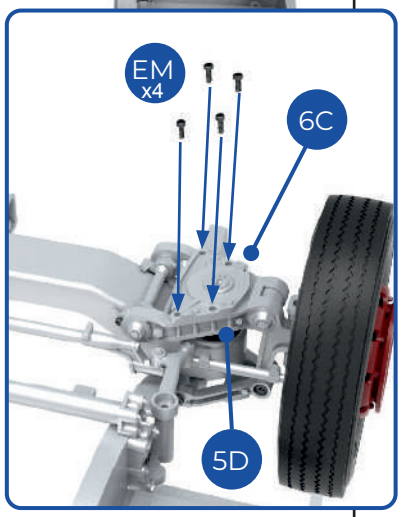

8 Replace the shock absorber fixtures 6C in the springs 6D. Fix both of the parts 6C to the trailing links 5D and 5E, as before, using four EM screws on each side. The inset shows one side being fixed in close up. It may be helpful to check the original fitting instructions in stage 6.

9

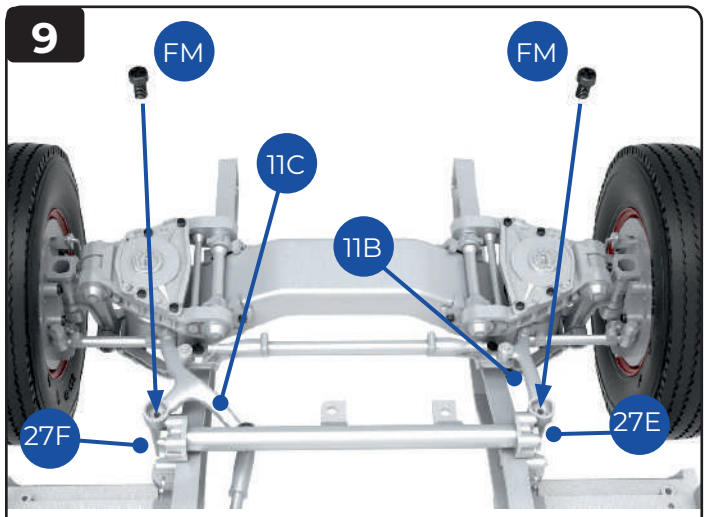

9 With the suspension arm fixed in place, the steering mechanism can be anchored: position the screw eyelet in command arm 11C over the right mounting 27F. Fix in place with an FM screw. Repeat to fix the push rod link 11B to the left mounting 27E. The inset shows a different view, with the FM screws circled in red.

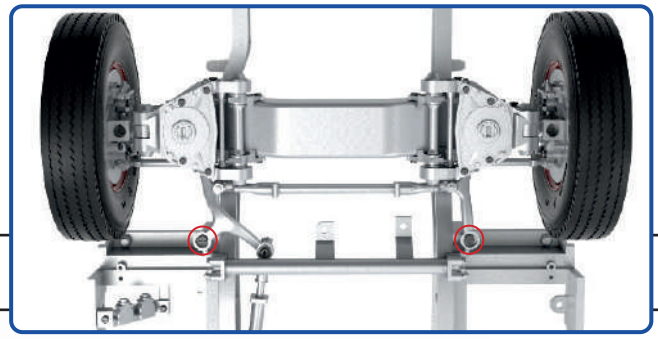

10

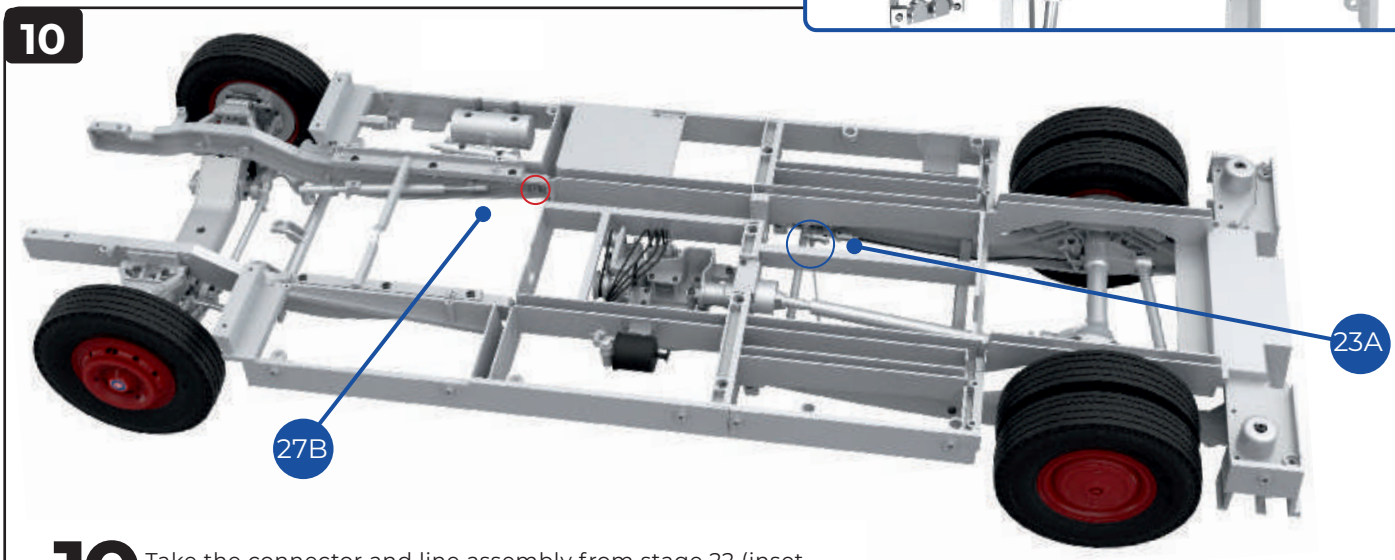

10 Take the connector and line assembly from stage 22 (inset, right). Identify the fixing points on the subframe (above). The bracket 22K is fitted to the screw hole on part 27B, circled in red. The end of the line 22N is connected to part 23A, circled in blue.

11

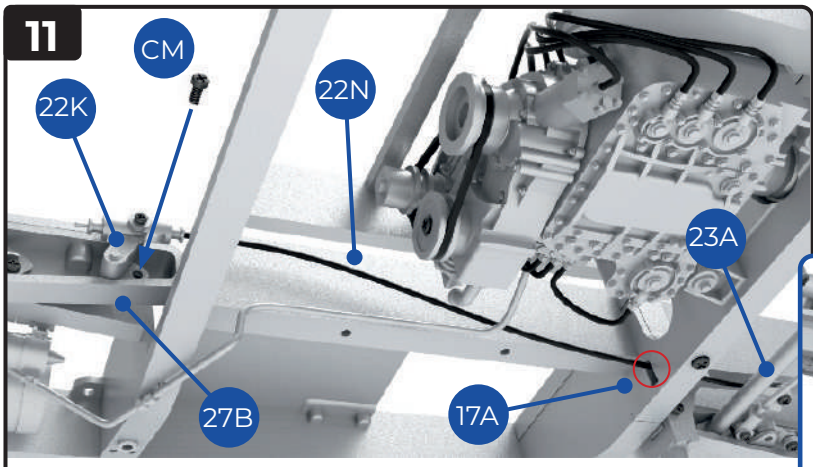

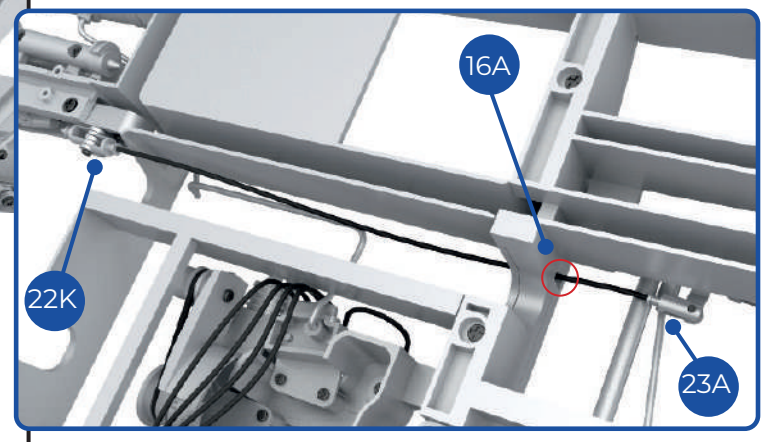

Fit the bracket 22K to the beam 27B and fix in place using a CM screw. Pass the line 22N over the crosspiece on the subframe, and through the opening (circled in red) in the subframe 16A/17A. Fit the end of the line onto the connector 23A. The inset shows the view from above.

Finished views

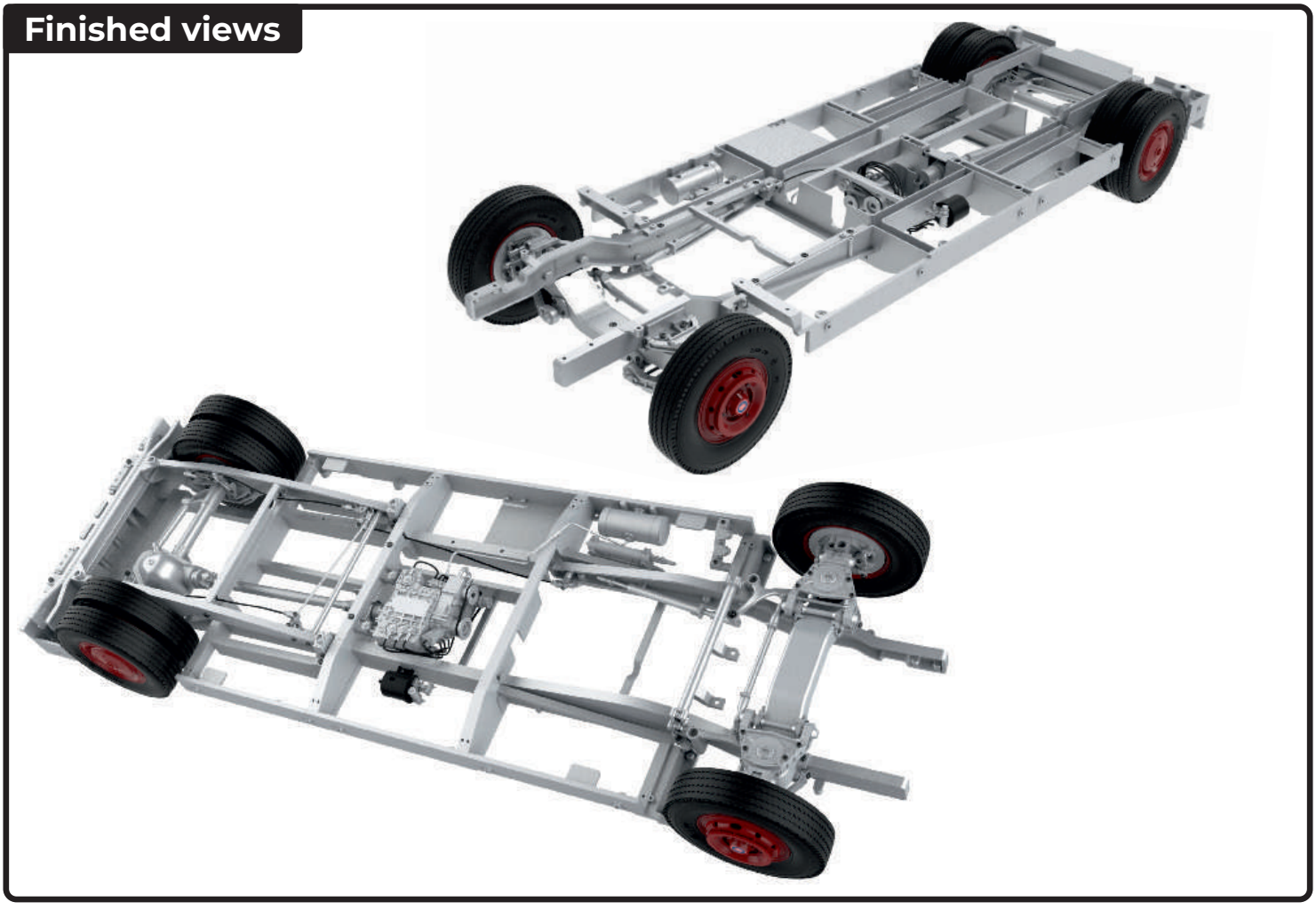

STAGE 28

ASSEMBLING THE RADIATOR

The main parts for the radiator and its casing are supplied with this stage. Follow the step-by-step instructions to assemble the parts.

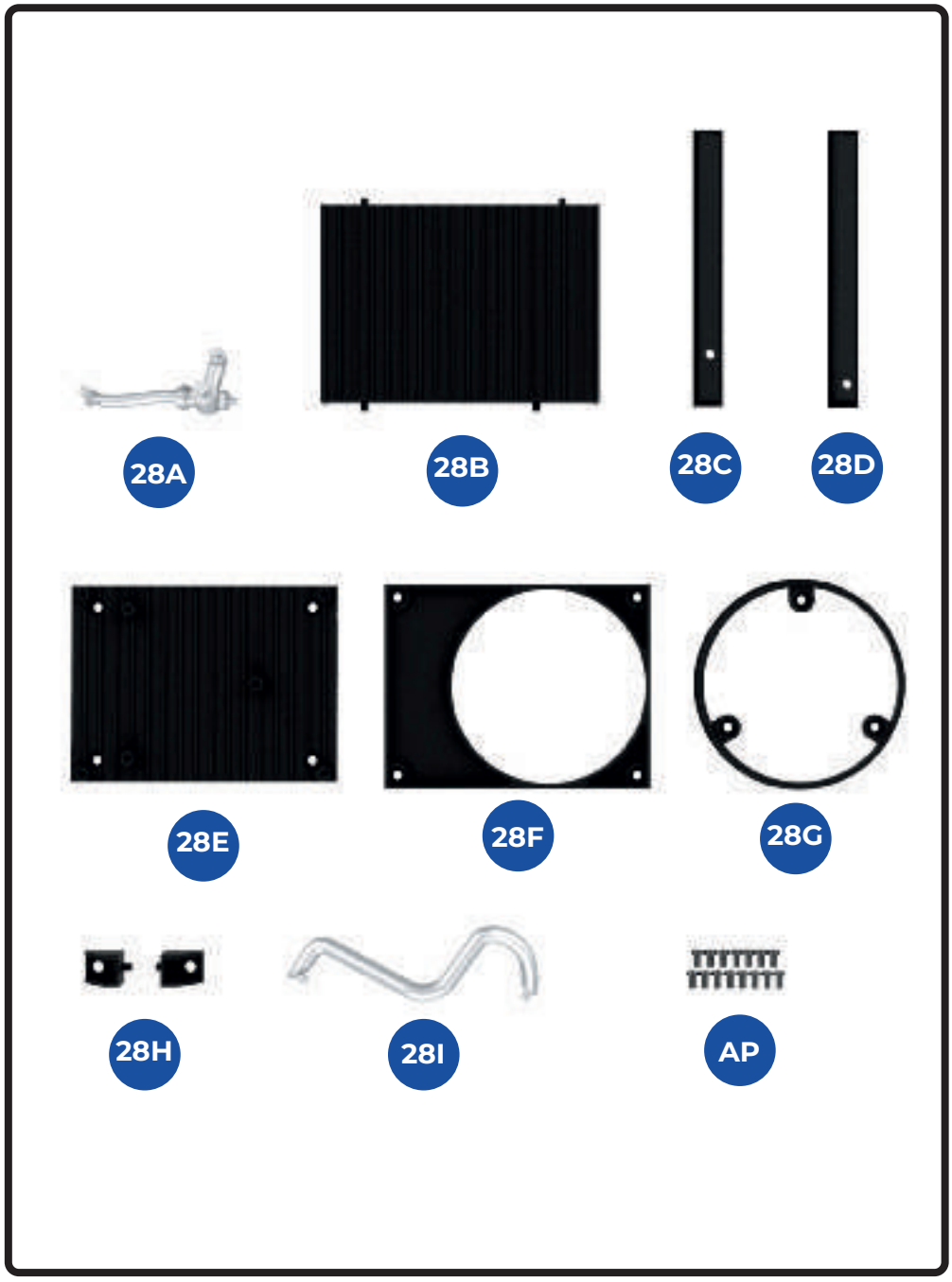

KEY TO PARTS SUPPLIED

28A	Thermostat
28B	Radiator
28C	Radiator top panel
28D	Radiator lower panel
28E	Radiator back panel
28F	Fan ring panel
28G	Fan ring
28H	Mounting brackets
28I	Radiator lower pipe
AP	1.7 x 3mm (x15)

The thermostat 28A and radiator lower pipe 28I are not fitted in this stage. Label them and store them carefully until they are needed.

1

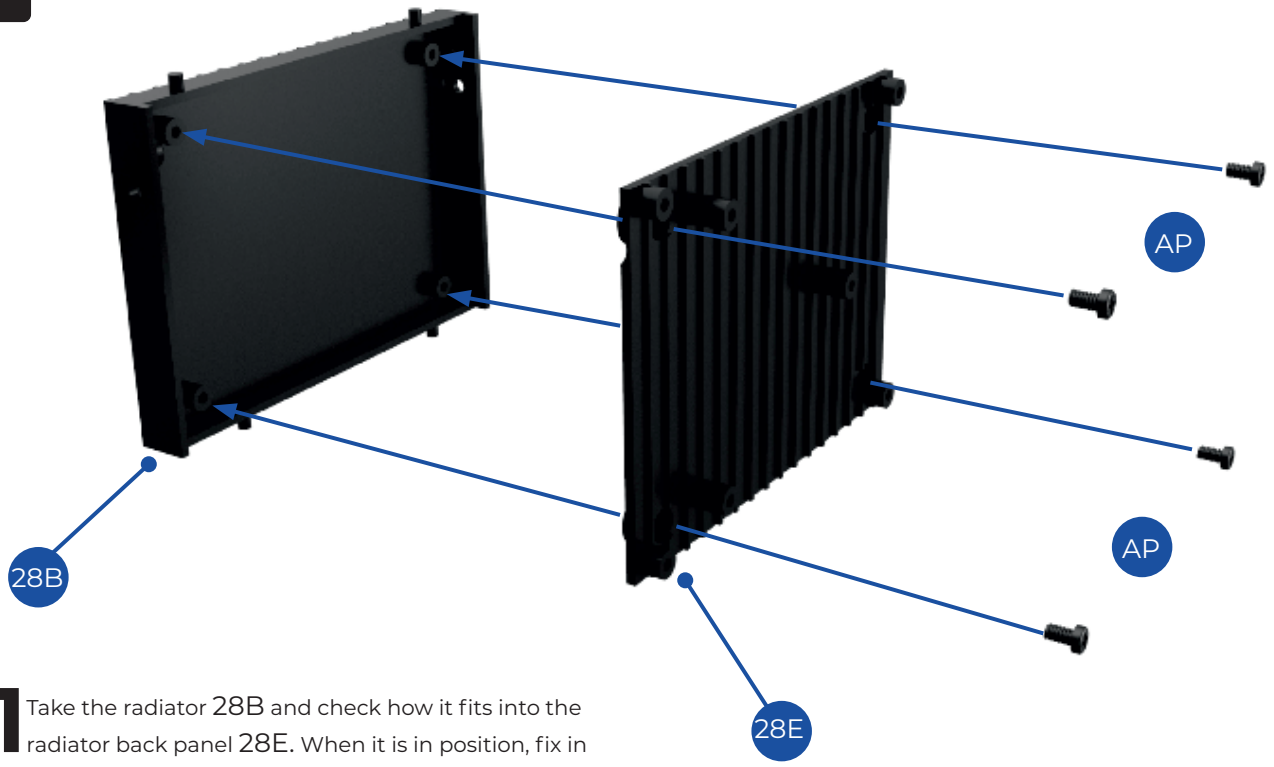

1 Take the radiator 28B and check how it fits into the radiator back panel 28E. When it is in position, fix in place with four AP screws.

2

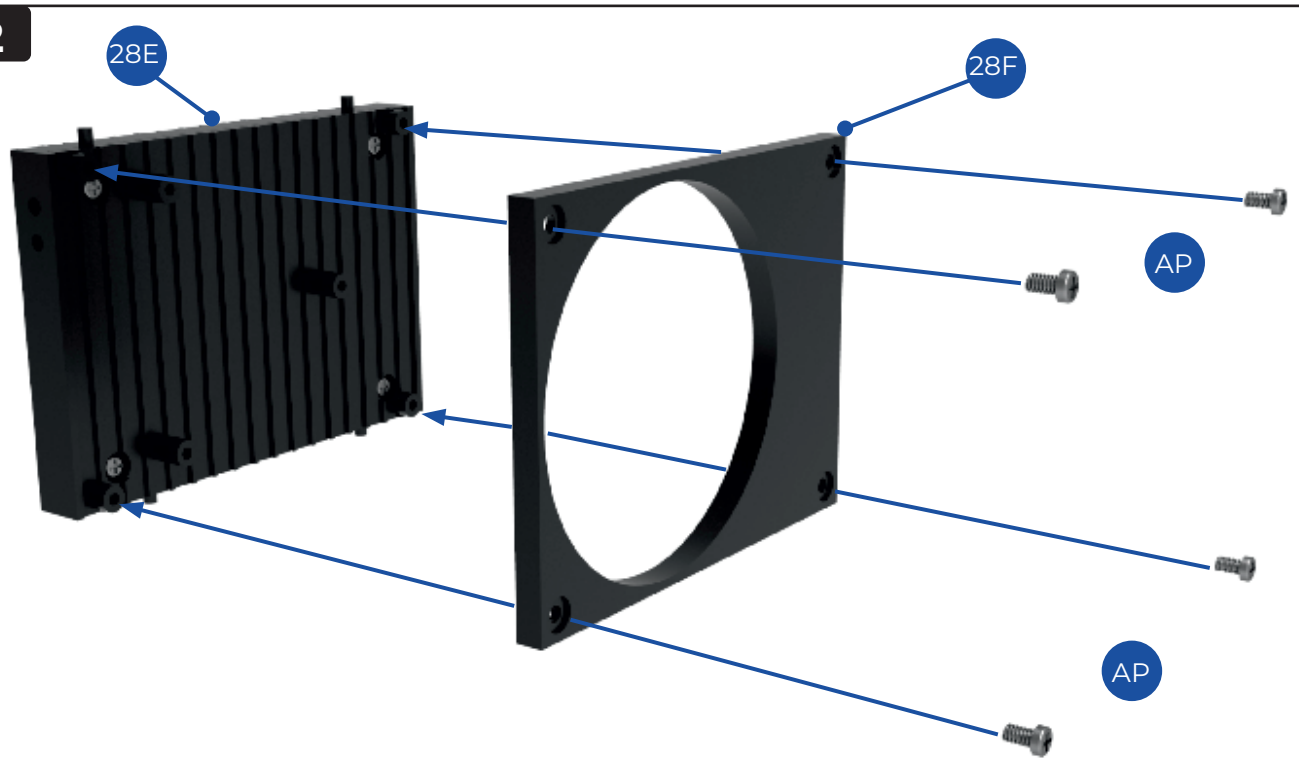

2 Fit the fan ring panel 28F to the radiator back panel 28E. Fix in place with four AP screws.

3

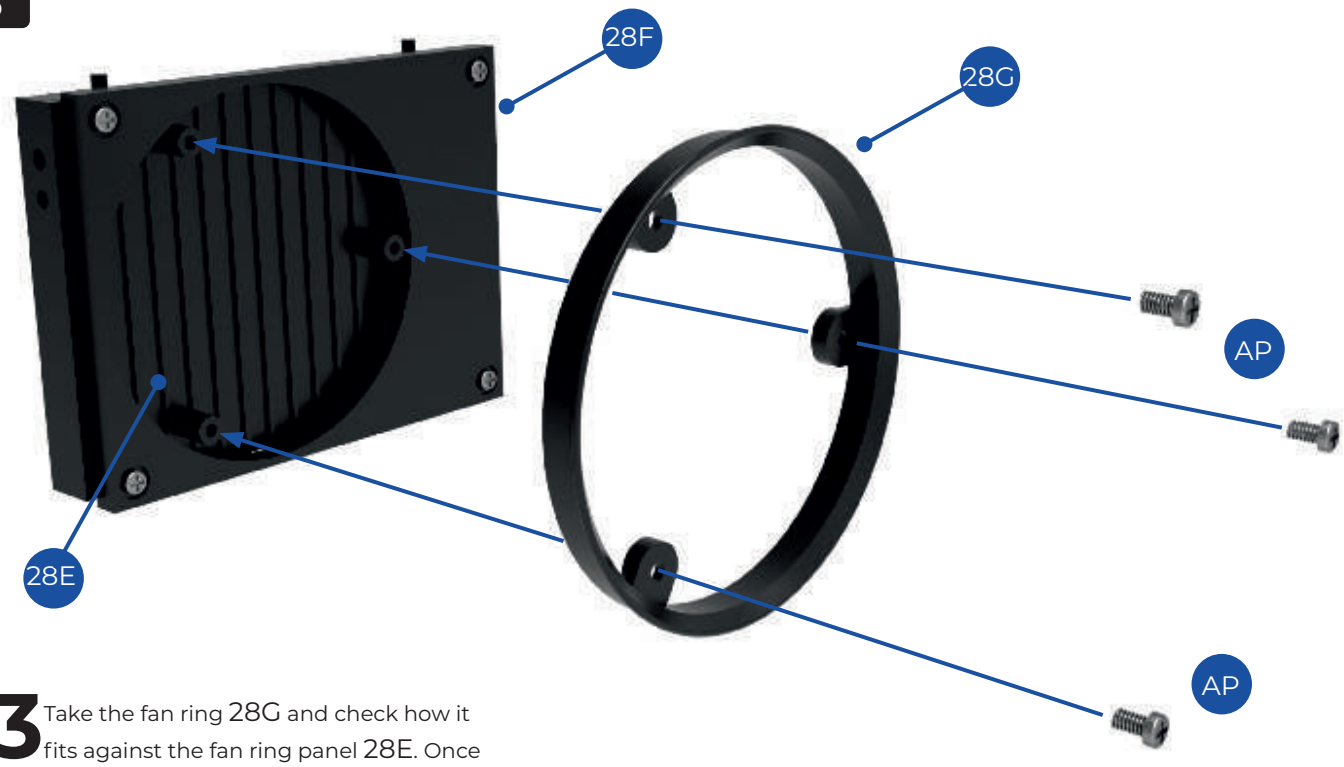

3 Take the fan ring 28G and check how it fits against the fan ring panel 28E. Once aligned, fix in place with three AP screws.

4

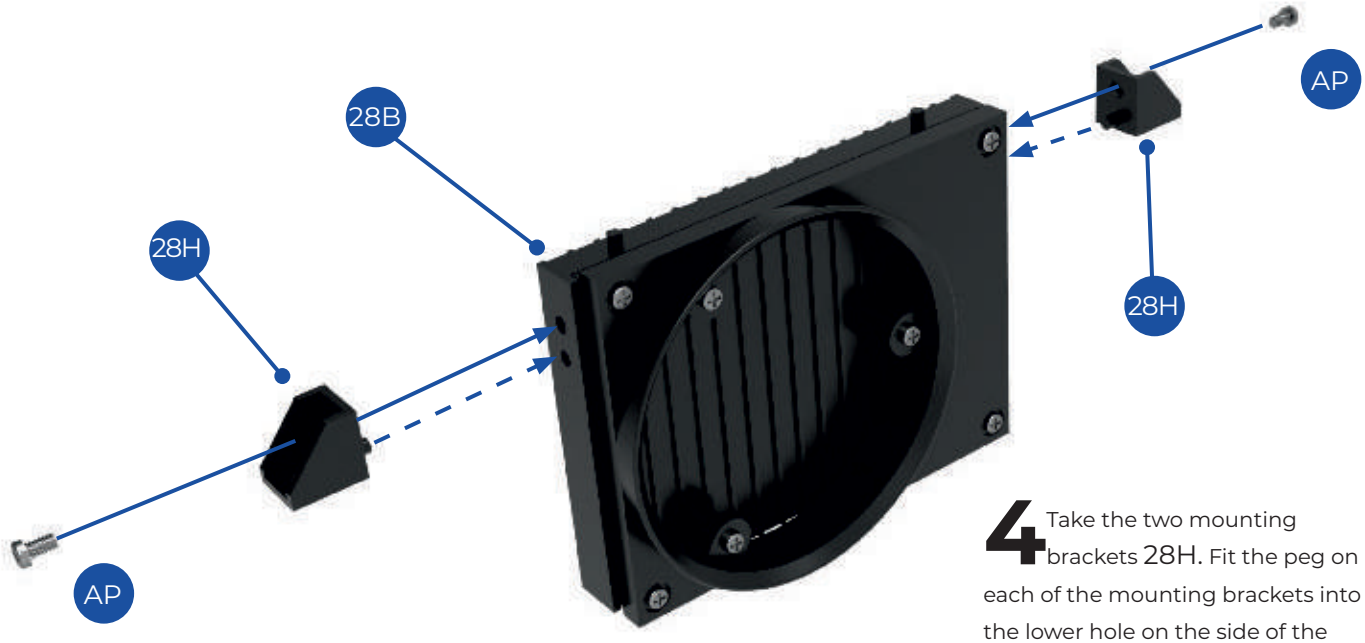

4 Take the two mounting brackets 28H. Fit the peg on each of the mounting brackets into the lower hole on the side of the radiator 28B, as indicated by the dotted lines. Fix in place with an AP screw on each side.

5

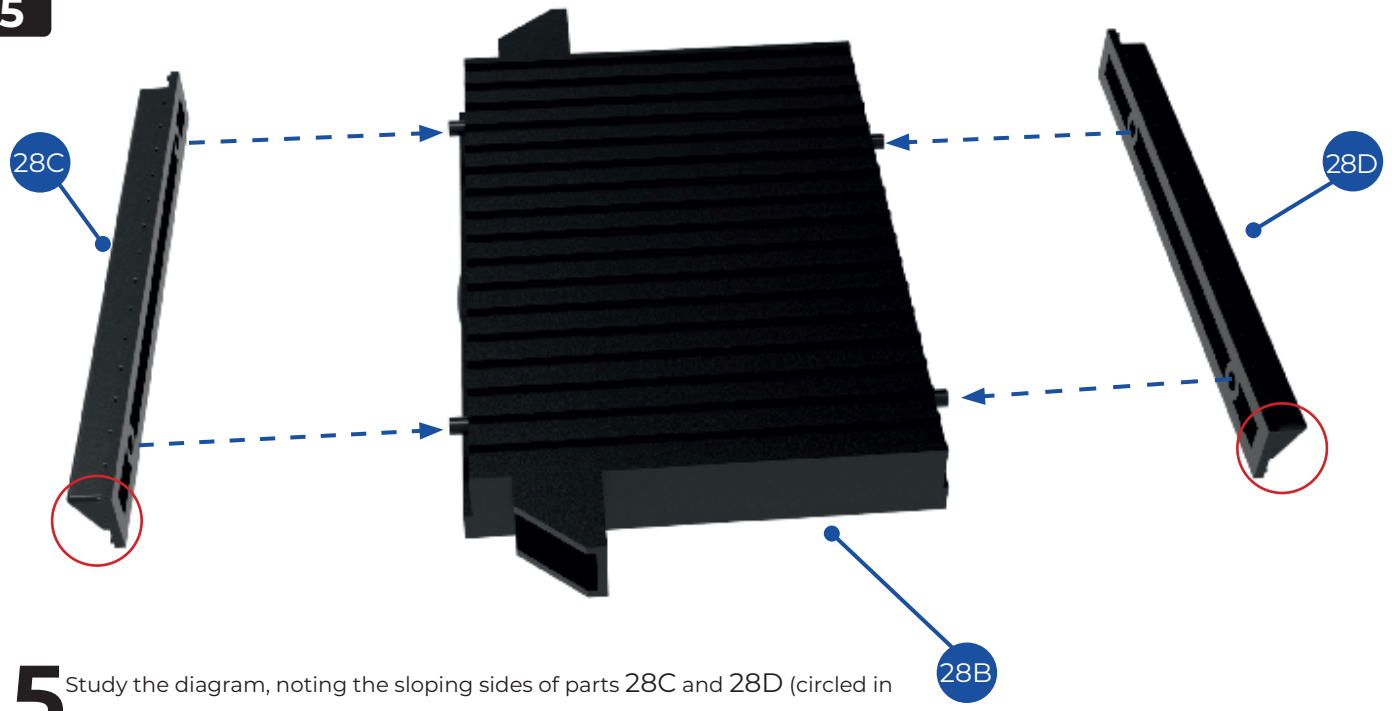

5 Study the diagram, noting the sloping sides of parts 28C and 28D (circled in red). Fit the sockets in the radiator top panel 28C over the pegs on the top of the radiator 28B, as indicated by the dotted lines. This is a push-fit connection. Repeat to fit the radiator lower panel 28D to the bottom of the radiator.

Finished views

Assembly guide

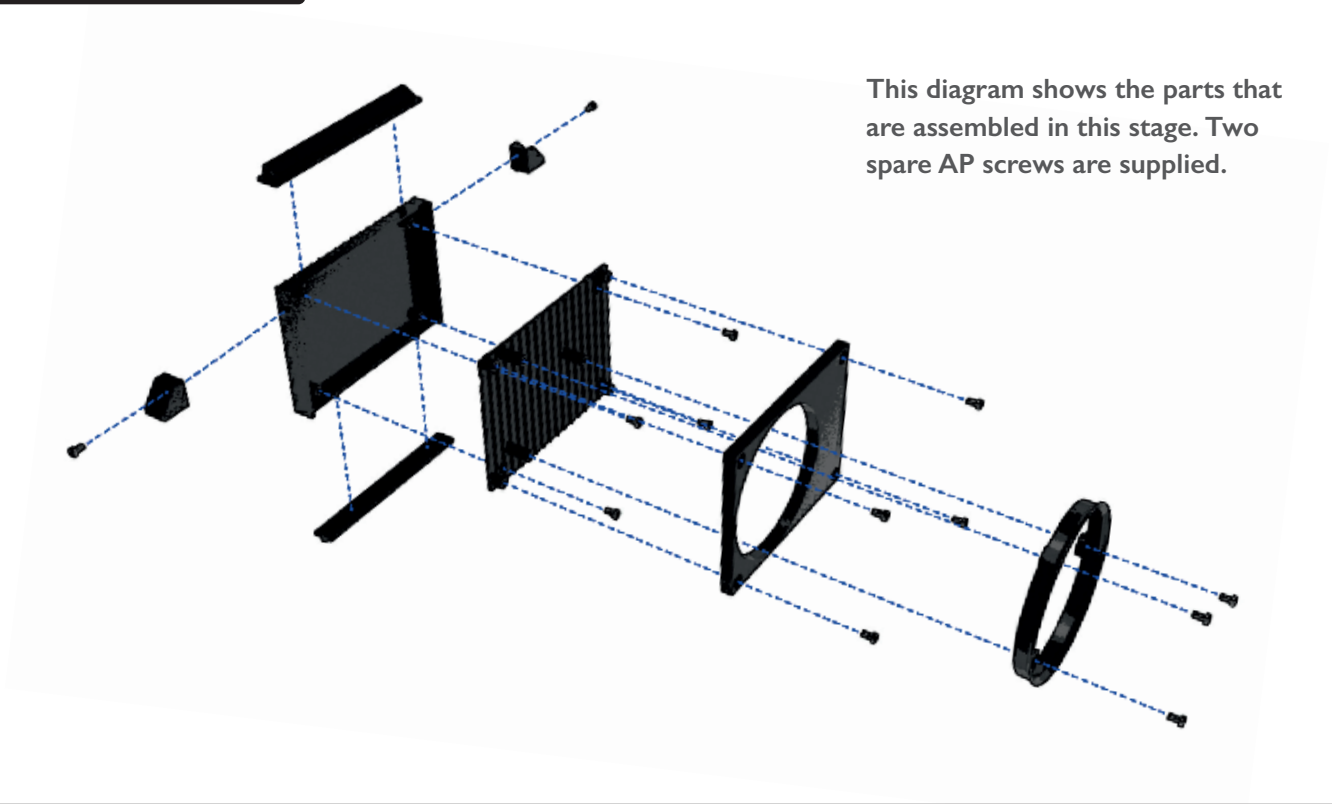

This diagram shows the parts that are assembled in this stage. Two spare AP screws are supplied.

A photograph of RML2589 during restoration, showing the radiator in position at the front of the bonnet.

STAGE 29

FINISHING AND FITTING THE ENGINE

Fuel lines are fitted to the engine, together with the thermostat and other details. The engine is then fitted to the subframe.

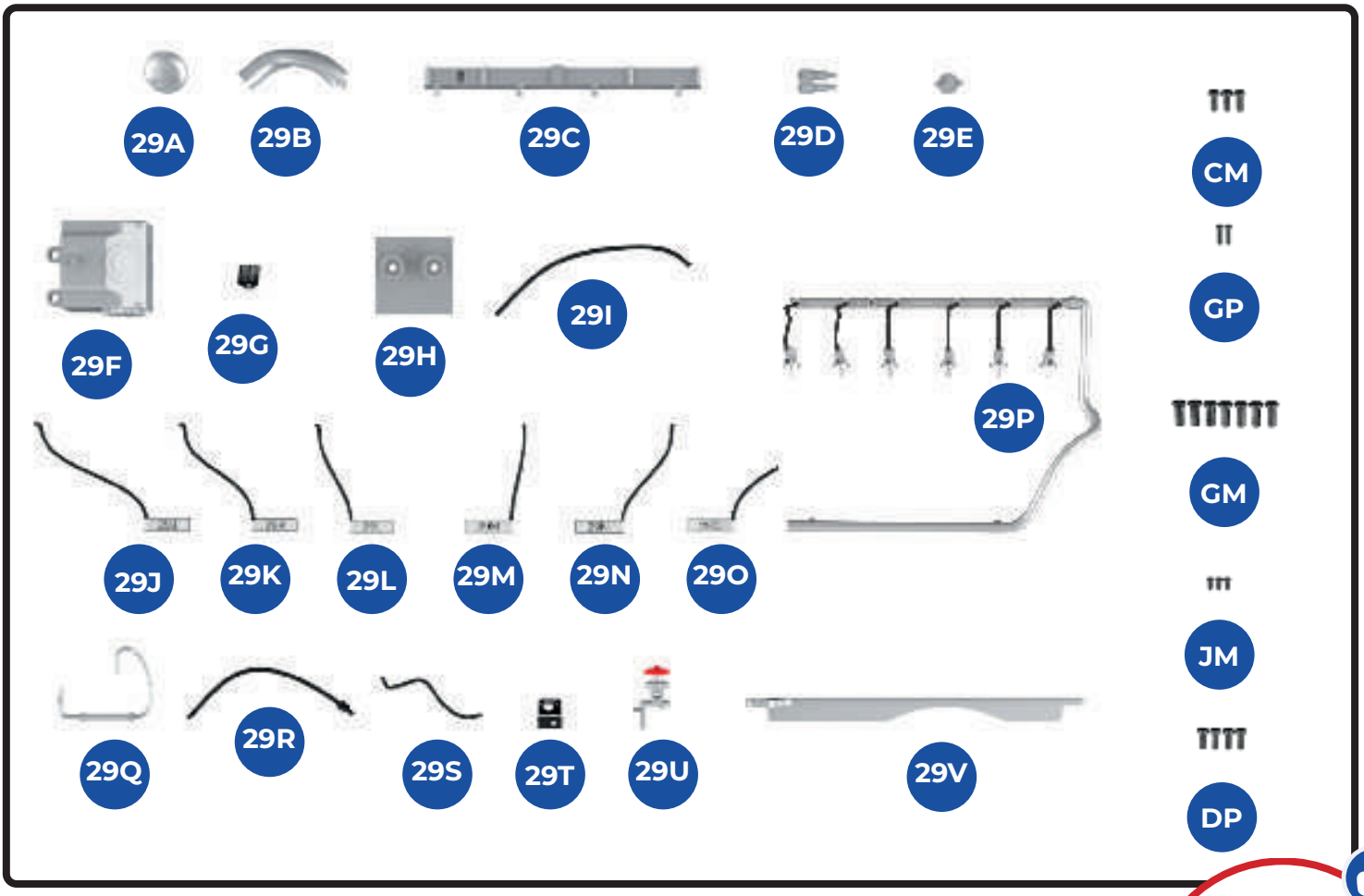

Many small parts are supplied with this stage. Work carefully, checking the instructions thoroughly, as it is detailed and delicate work.

KEY TO PARTS SUPPLIED

29A	Cap	**29H**	Back plate	**29P**	Feed pipe		
29B	Stub pipe	**29I**	Line	**29Q**	Fuel gauge pipe	**CM**	1.7 x 4mm (x3)
29C	Duct	**29J**	Fuel line	**29R**	Fuel line	**GP**	1.2 x 4mm (x2)
29D	Link	**29K**	Fuel line	**29S**	Line	**GM**	2.3 x 5mm (x7)
29E	Cap	**29L**	Fuel line	**29T**	Instruction plate	**JM**	1.2 x 3mm (x3)
29F	Coolant header tank	**29M**	Fuel line	**29U**	Tap	**DP**	1.7 x 4mm (x4)
		29N	Fuel line	**29V**	Beam		
29G	Instruction plate	**29O**	Fuel line				

1

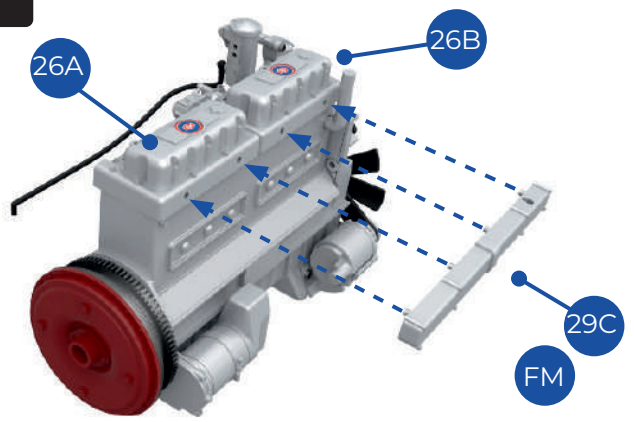

1 Take the duct 29C. Fit the four pegs on part 29C into the cylinder head – two pegs are fitted to part 26A and two are fitted to 26B. These are push-fit connections.

2

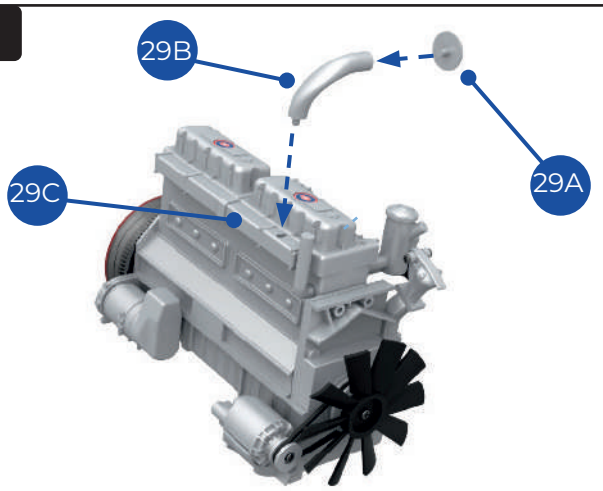

2 Fit the peg on the cap 29A into the recess in the stub pipe 29B. Fit the peg on part 29B into the hole in the duct 29C.

3

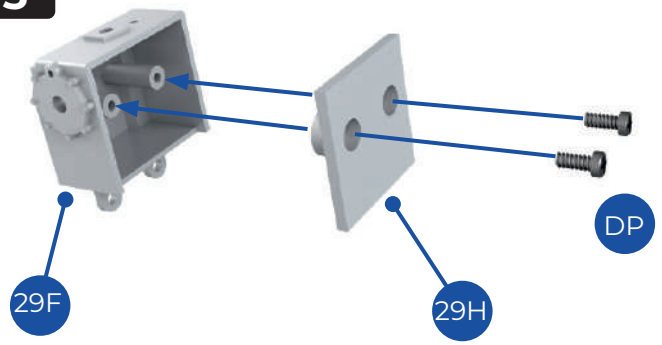

3 Fit the sockets on the back plate 29H over the raised sockets in the coolant tank 29F. Fix in place with two DP screws.

4

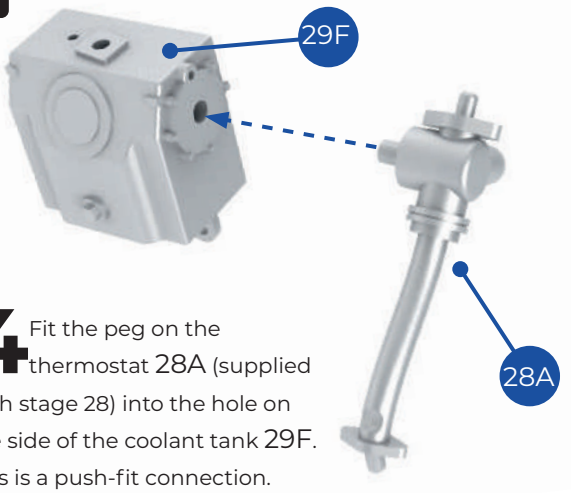

4 Fit the peg on the thermostat 28A (supplied with stage 28) into the hole on the side of the coolant tank 29F. This is a push-fit connection.

5

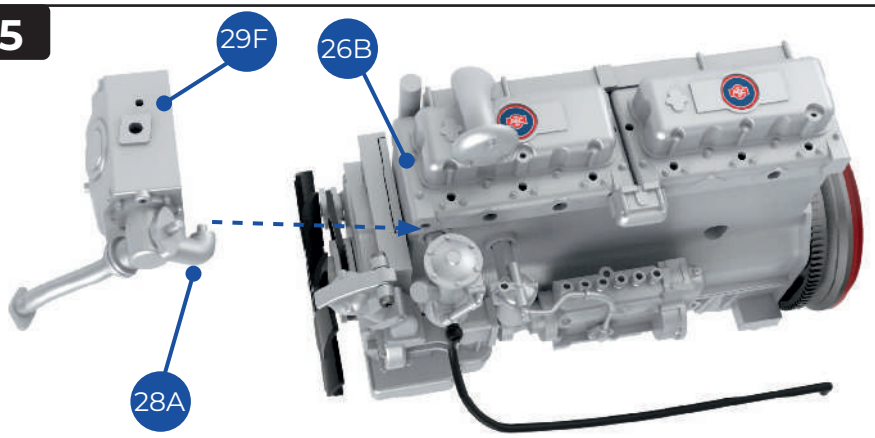

5 Fit the peg on the end of the short pipe on the thermostat 28A into the socket on the end of the cylinder head 26B. This is a push fit connection.

6

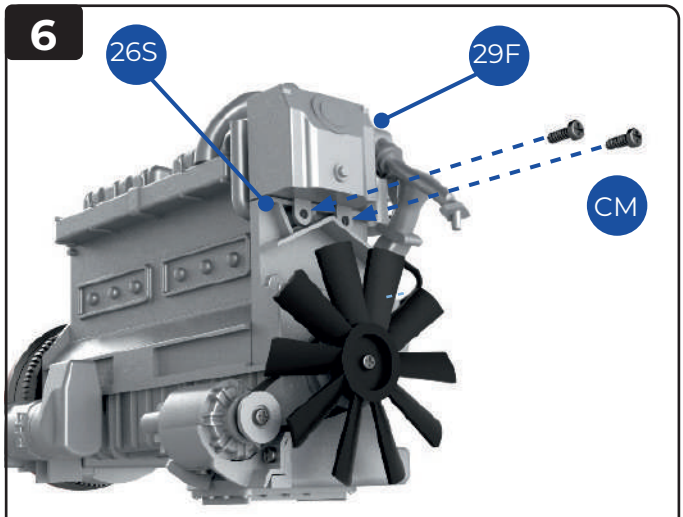

6 Check that the two screw holes at the bottom of the coolant tank 29F are aligned with the sockets on the end of the front housing 26S of the crank case. Fix in place with two CM screws.

Finished view

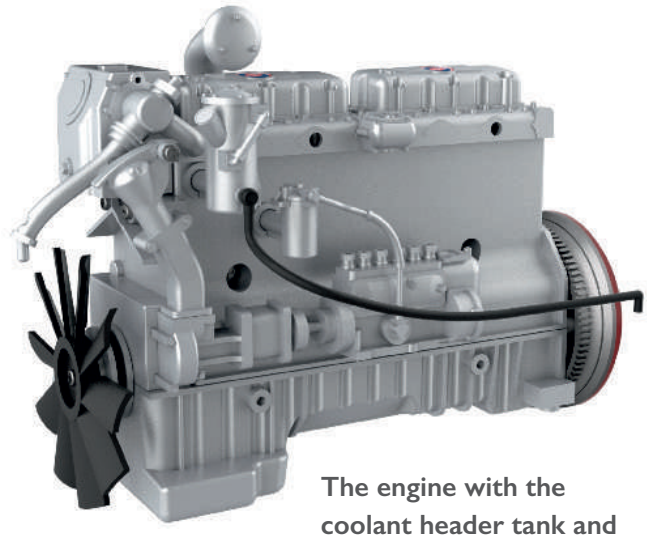

The engine with the coolant header tank and thermostat fitted in place.

7

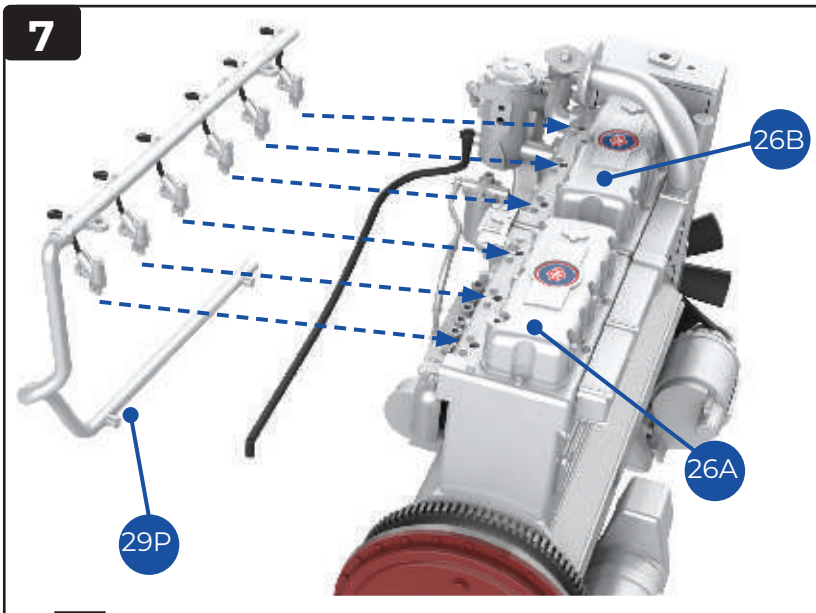

7a

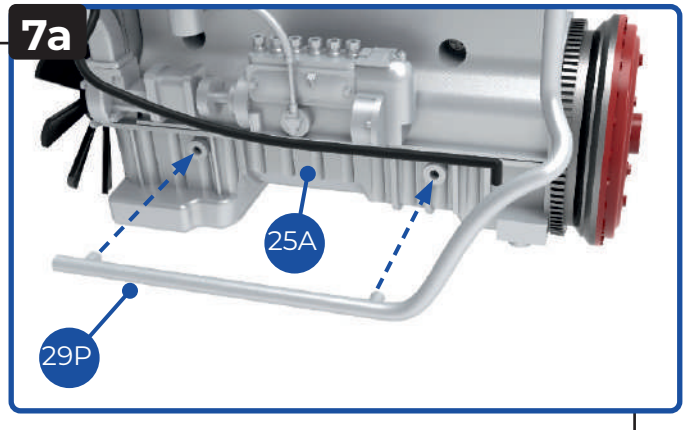

7b

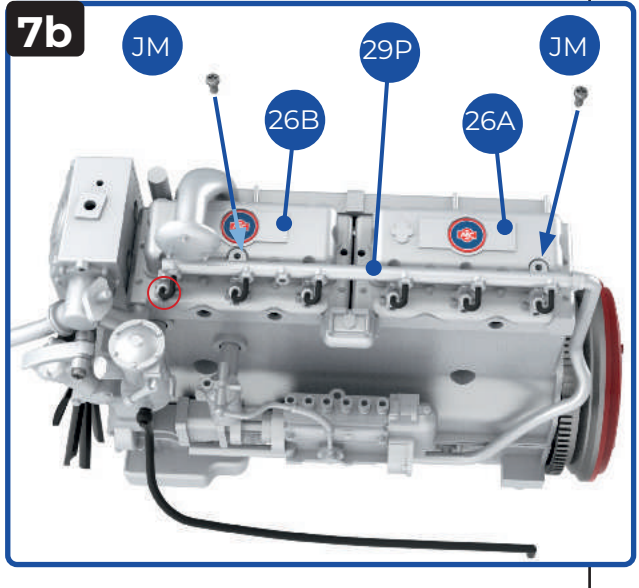

7 Take the feed pipe 29P and fit the six connectors into the sockets on the cylinder head – three fit into part 26B and three into part 26A. NOTE: You will need tweezers to attach these connectors.

7a Fit the pegs on the lower arm of part 29P into the two sockets on the oil sump 25A.

7b With all the connectors in position, fix the feed pipe 29P in place with two JM screws through the holes in 29P and into the cylinder head, one in part 26B and one in part 26A. NOTE: Ensure that the connections between the cylinder head and the feed pipe remain at right angles and do not swivel as you fix the feed pipe in place. The correct position (circled on the left) is shown here.

8

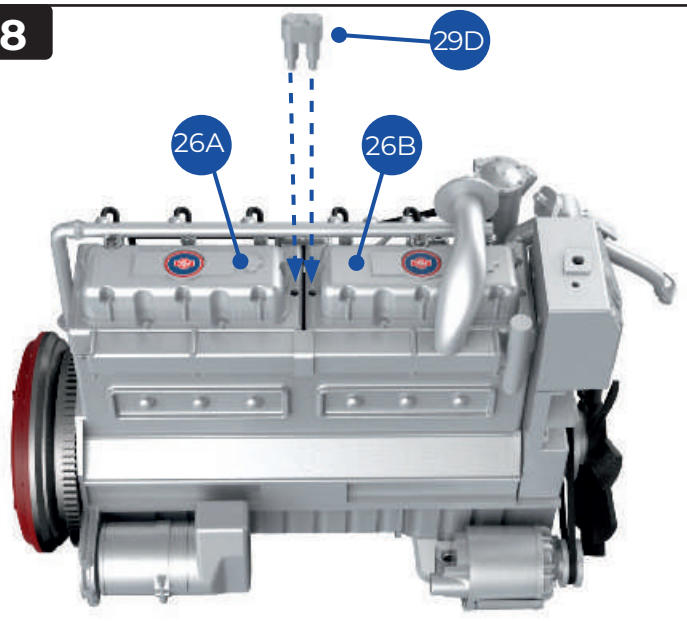

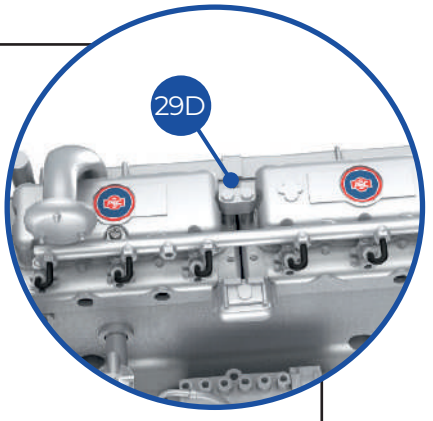

8 Take the link 29D and fit the two pegs into the sockets in the cylinder head, one in part 26A and one in part 26B. This is a push-fit connection. The inset (right) shows part 29D in place.

9

9 Fit the first three fuel lines: the upper ends of parts 29O, 29N and 29M fit into the sockets in the feed pipe 29P; the lower ends fit into the sockets in the injection pump 25D. When each of these is in place, fit the other three fuel lines, 29L, 29K and 29J in a similar manner.

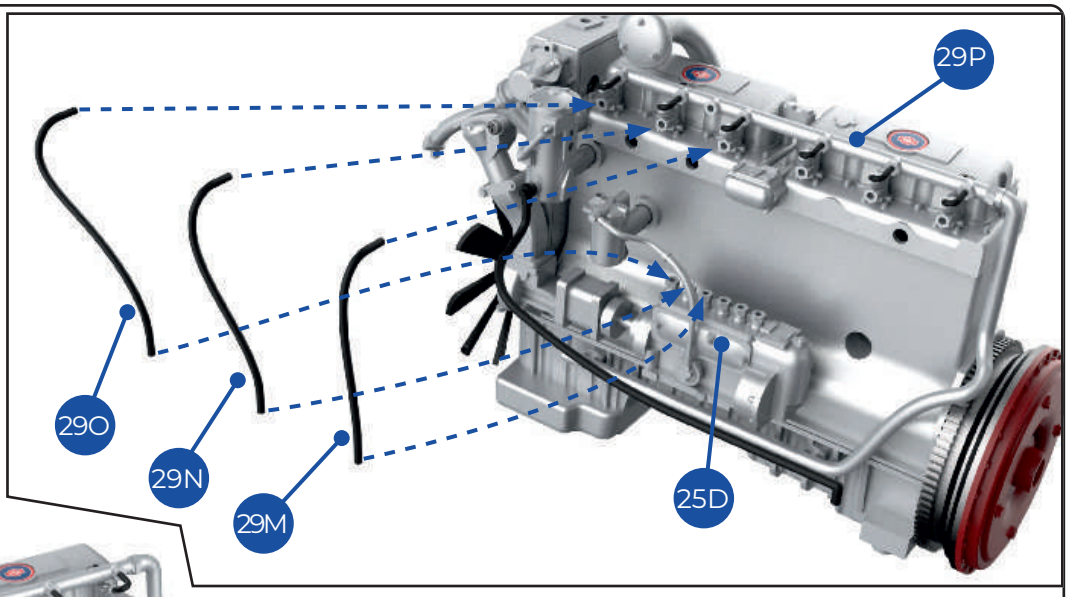

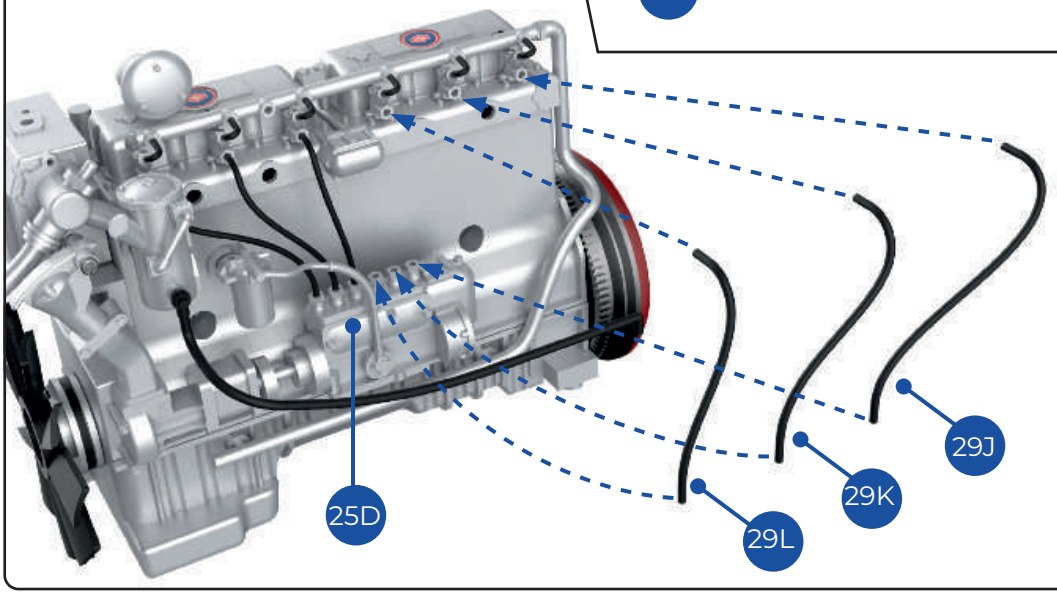

Parts 29J – 29O are delicate, so handle them with care. Note that the longest parts, 29O and 29J are furthest away from part 25D, while 29M and 29L, towards the middle, are the shortest.

10

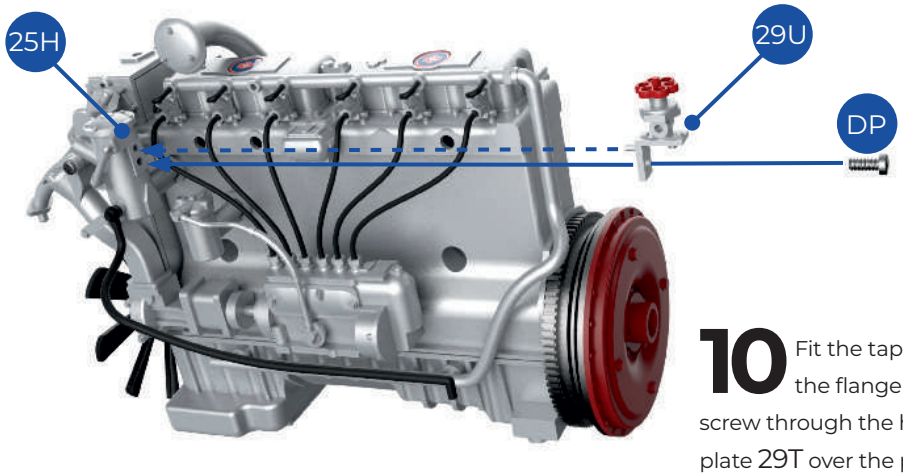

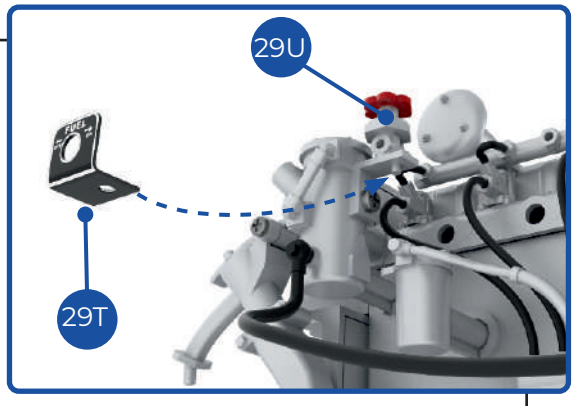

10 Fit the tap 29U to the steering fluid reservoir 25H: the peg on the flange on the tap fits into a socket. Fix in place with a DP screw through the hole in the flange. Fit the eyelet in the instruction plate 29T over the peg on the bottom of the tap 29U (above).

11

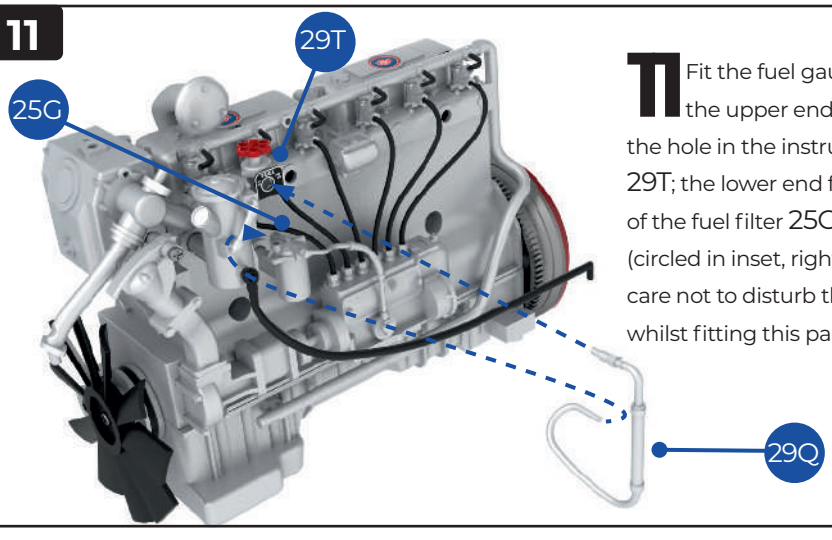

11 Fit the fuel gauge pipe 29Q: the upper end fits through the hole in the instruction plate 29T; the lower end fits into the cap of the fuel filter 25G, from the back (circled in inset, right). NOTE: Take care not to disturb the other lines whilst fitting this part.

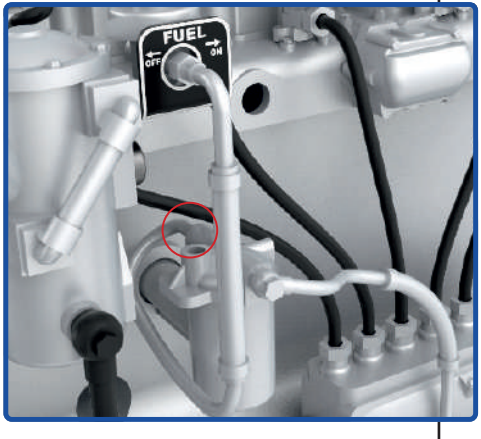

12

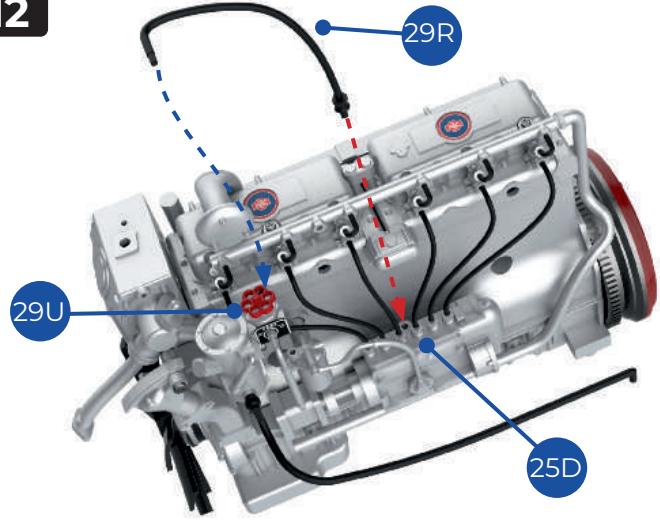

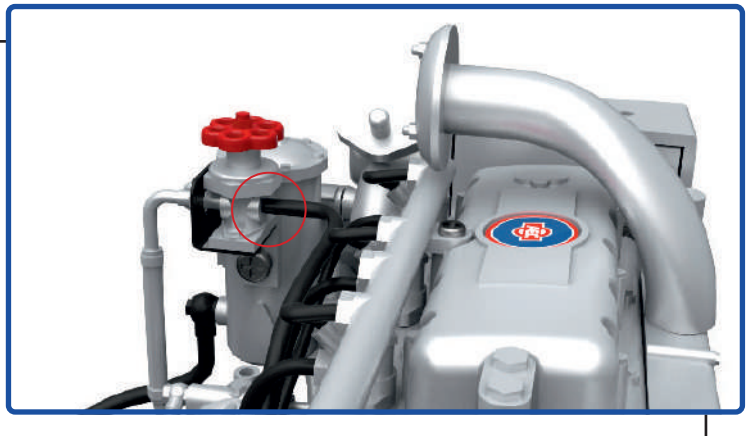

12 Fit the fuel line 29R: one end fits into the back of the tap (cirled in inset, above). The other end fits into the injection pump 25D, in the centre hole. These are push-fit connections.

13

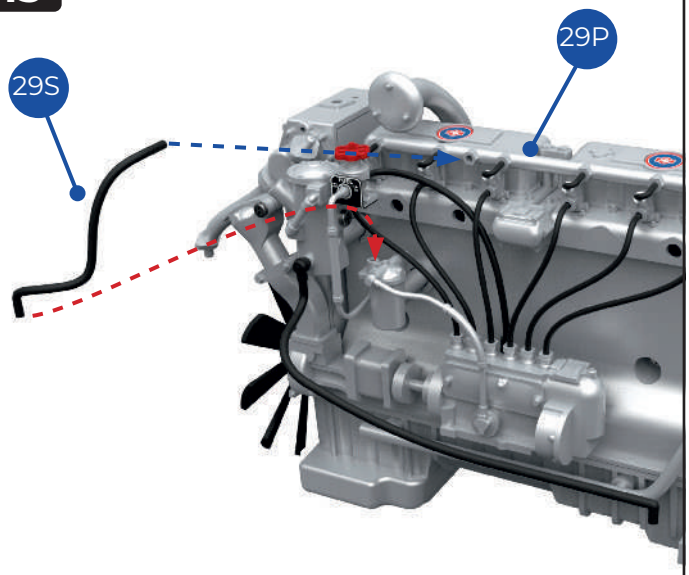

13 Take the line 29S. Fit one end into the hole in the feed pipe 29P. Fit the lower (bent) end into the socket in the top of the cap 25G, as indicated by the red dotted line.

14

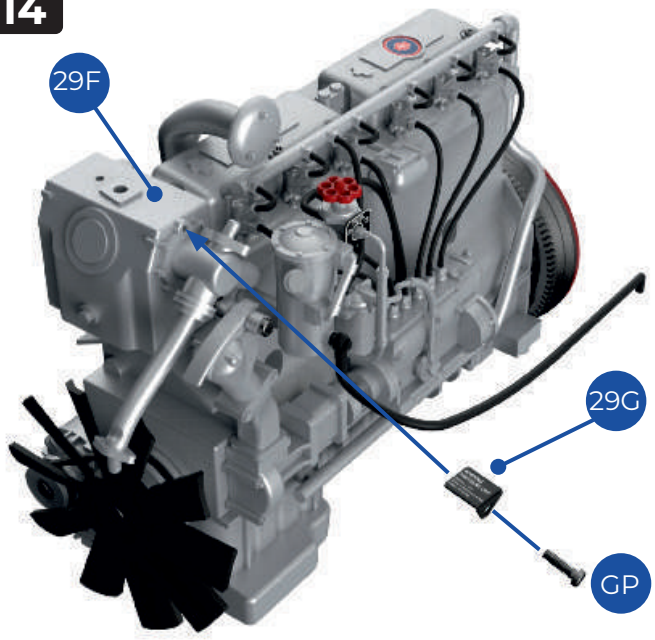

14 Take the instruction plate 29G. Check the fit over the top corner of the coolant tank 29F. Fix in place with a GP screw.

15

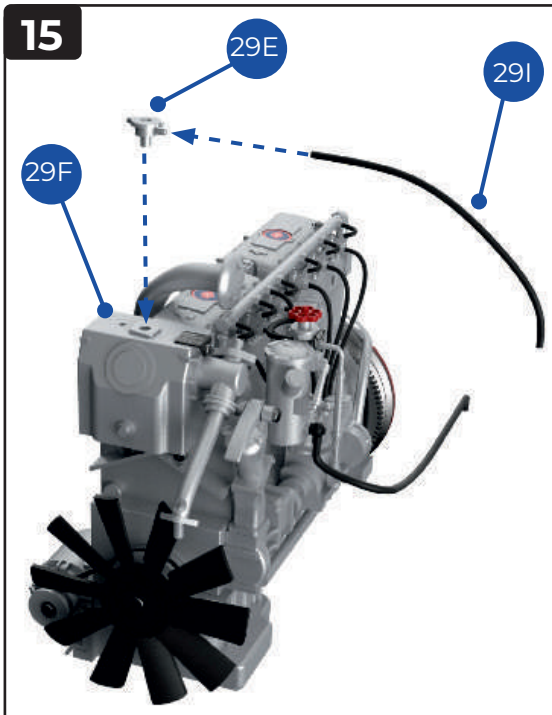

15 Fit one end of the line 29I over the peg on the side of the cap 29E. Fit the peg on the bottom of the cap into the socket in the coolant tank 29F.

16

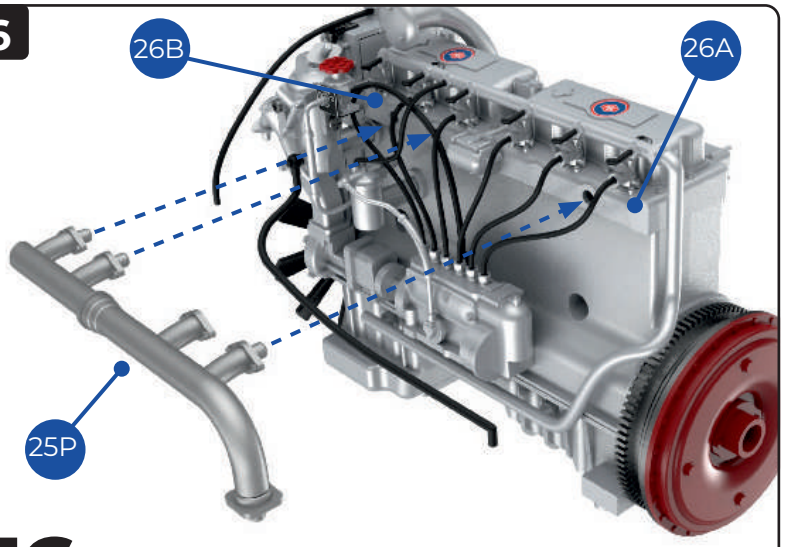

16 Take the exhaust manifold 25P. It has three pegs that fit into the cylinder heads 26A and 26B. Take care not to disturb the fuel lines. These are push-fit connections. The inset shows the manifold in place.

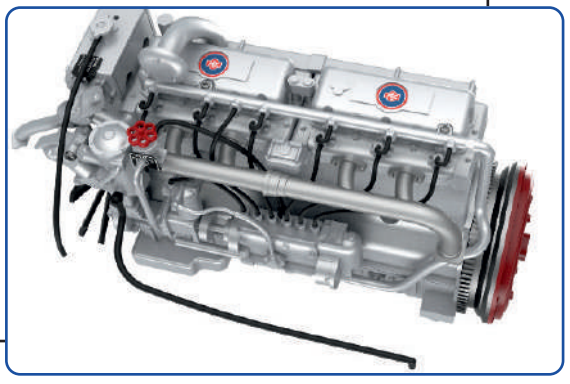

17

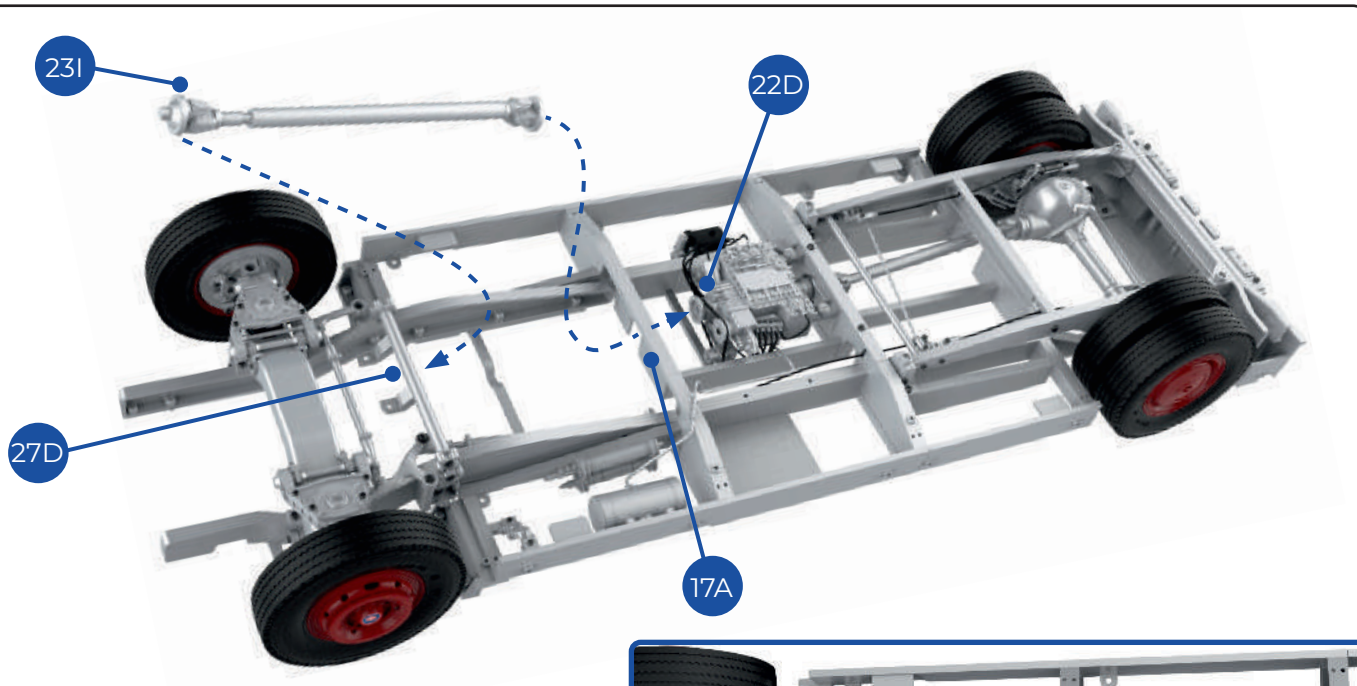

17 Take the drive shaft 23I, supplied with stage 23, and the subframe assembly completed in stage 27. Check the difference between the ends of part 23I, and ensure you have it the right way round. Working from below, fit one end under the notch in the cross bar on the rear sub-frame 17A and into the socket on the pulley part 22D. The other end goes under the cross rod 27D. The shaft rests on the notch in the narrow cross bar on part 17A. (inset, right).

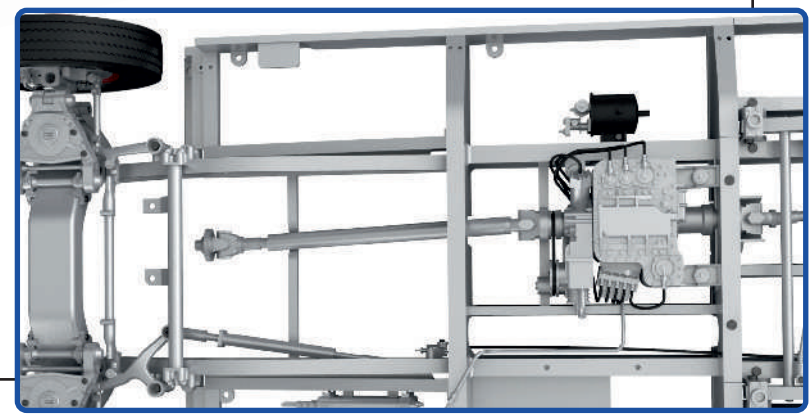

18

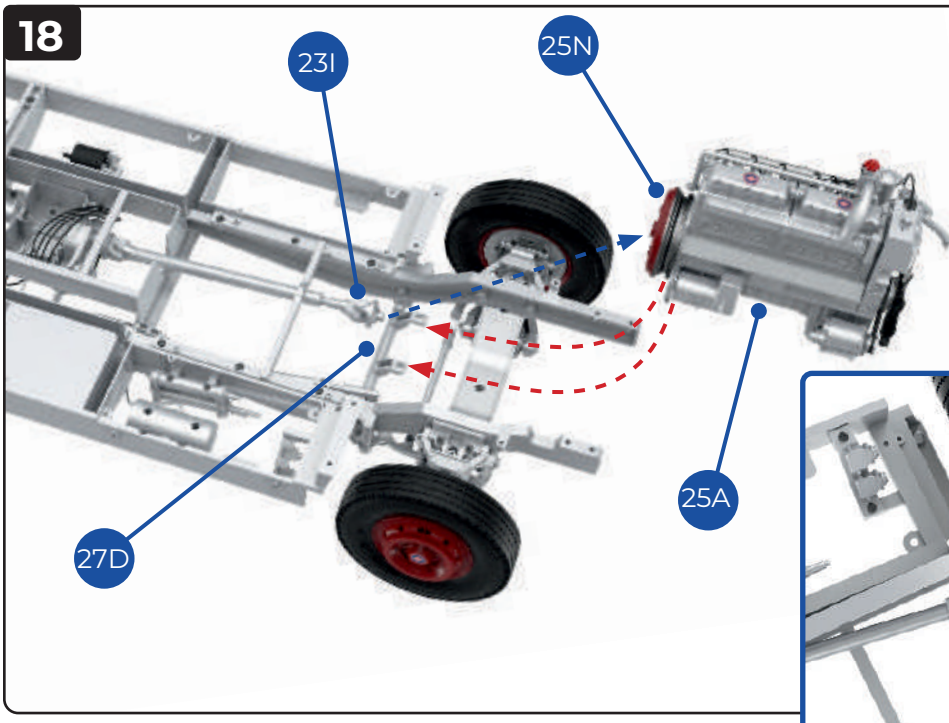

18 Turn the assembly the right way up to fit the engine to the sub-frame. Fit the free end of the drive shaft 23I into the flywheel 25N. Two sockets on the underside of the engine assembly fit over the eyelets on the subframe (as shown by red dotted lines, and below, viewed from underneath).

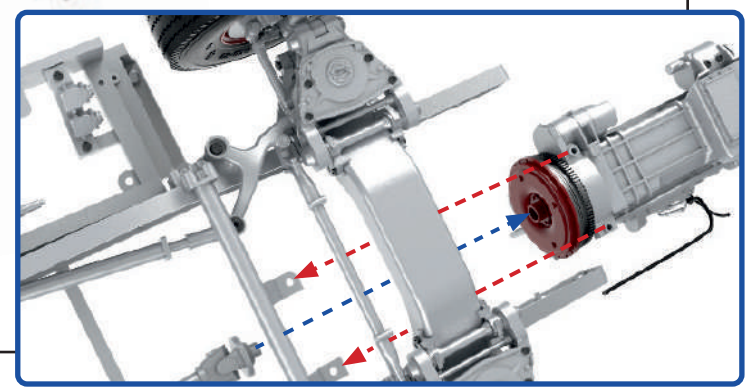

19

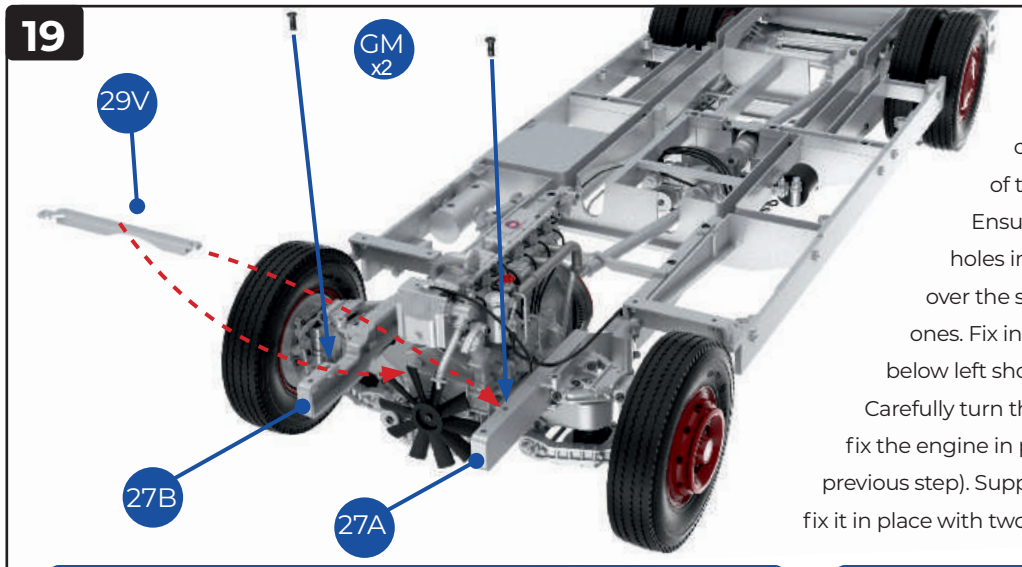

19 Take the beam 29V and fit it across the two front beams of the sub-frame, 27A and 27B, in front of the engine assembly but behind the fan. Ensure the screw holes in 29V are over the holes in the beams. NOTE: The screw holes fit over the second holes in the beams, not the end ones. Fix in place with two GM screws. The inset below left shows the beam fixed in place.

Carefully turn the assembly on to its side so that you can fix the engine in place through the holes in part 27D (see previous step). Support the assembly and engine while you fix it in place with two GM screws see inset below).

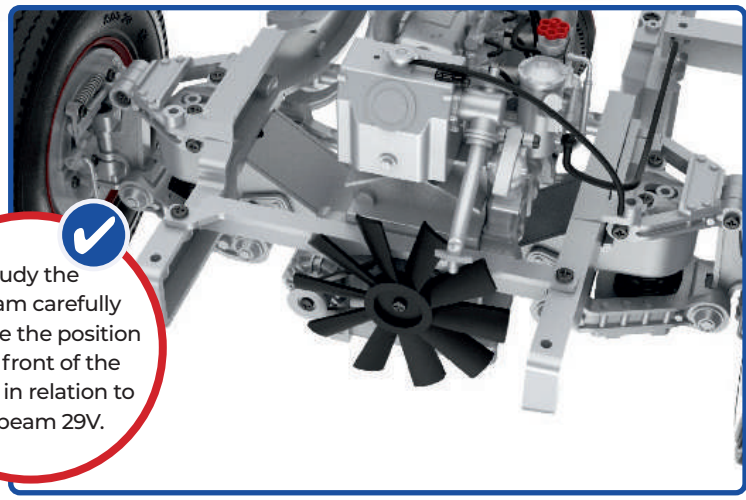

Study the diagram carefully and note the position of the front of the engine in relation to the beam 29V.

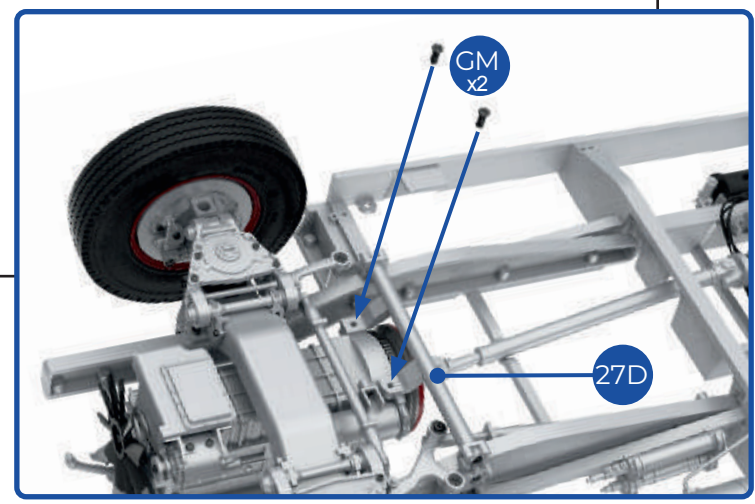

20

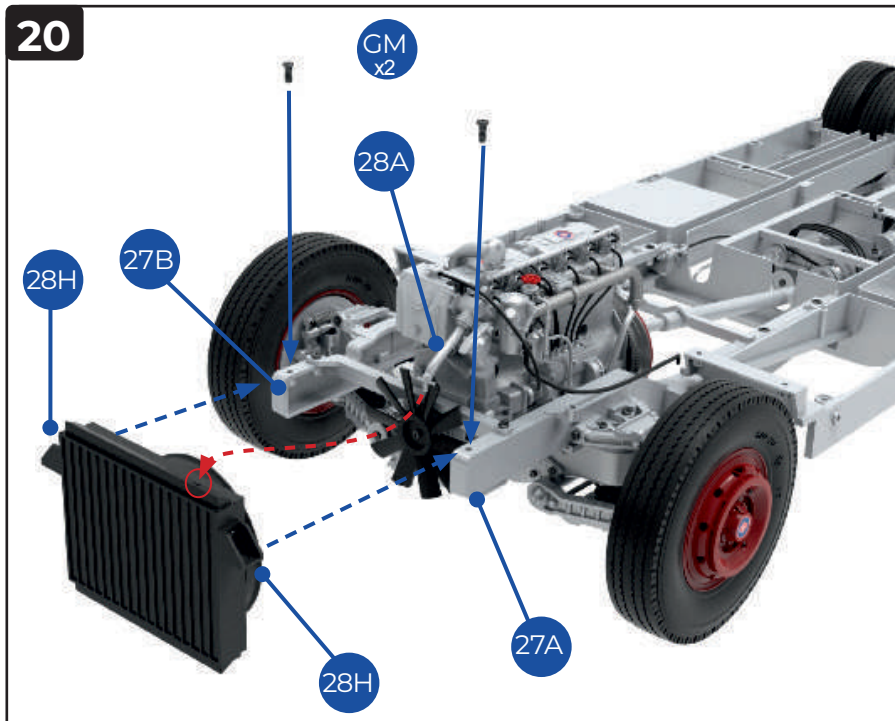

20 Mount the radiator assembly on the front of beams 27A and 27B using the mounting brackets 28H. At the same time, guide the peg on the end of the thermostat pipe 28A into the top socket on the radiator (as indicated in red). Ensure the fan 26D fits into the fan ring on the back of the radiator. Fix in place with two GM screws. The inset below shows the radiator fixed in place.

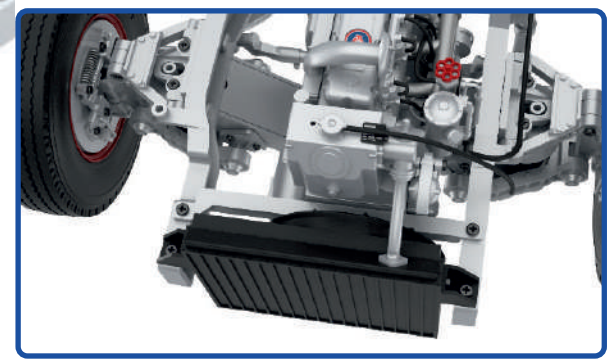

21

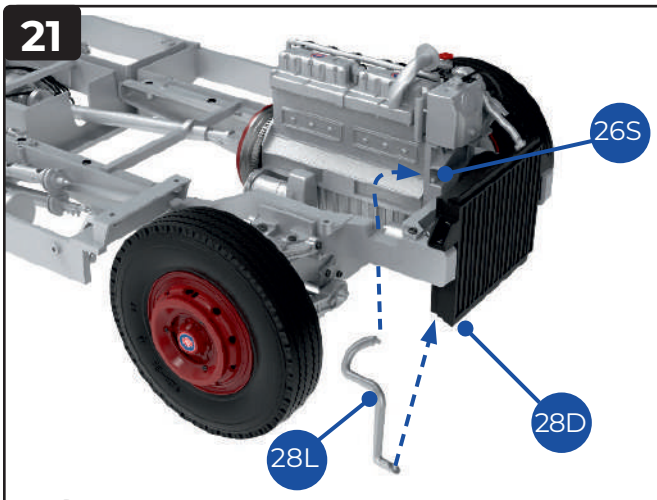

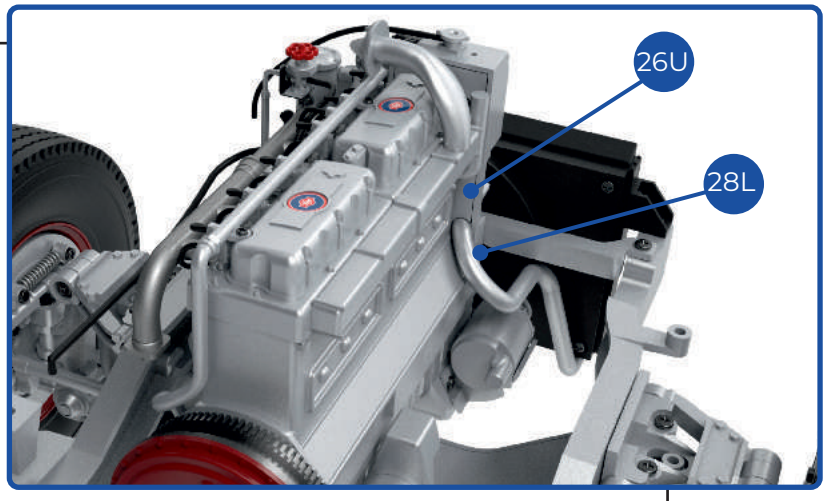

21 Take the radiator lower pipe 28I and fit the peg in the upper end into the socket in back plate 26U, behind the front housing 26S. Fit the peg on the lower end of the pipe into the socket on the radiator lower panel 28D. The inset above shows the pipe fixed in place, viewed from behind.

Finished views

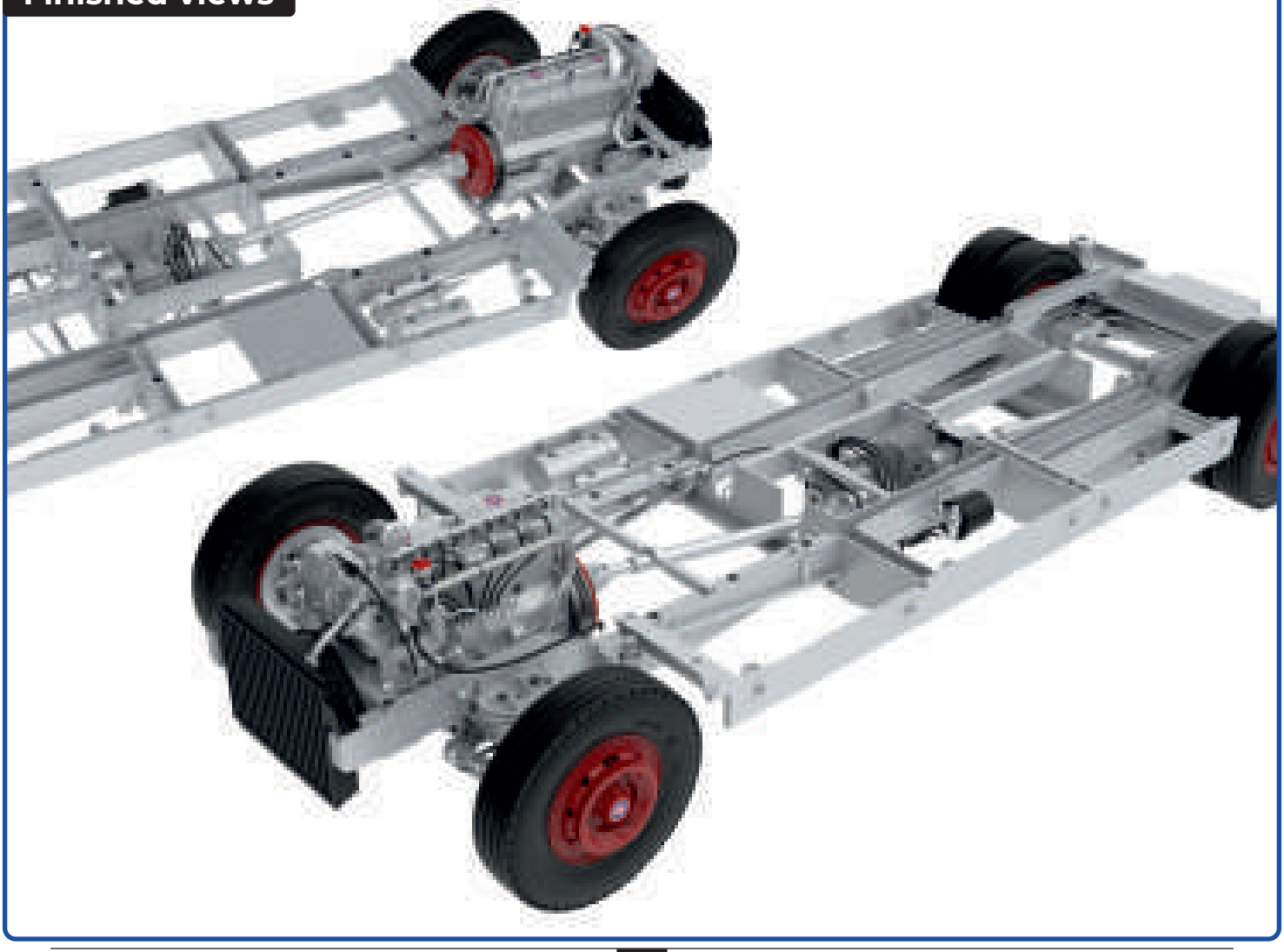

STAGE 30

FITTING THE EXHAUST PIPE

Three sections of exhaust pipe and the silencer are fitted to the subframe, reaching from the exhaust manifold on the engine to the rear of the bus.

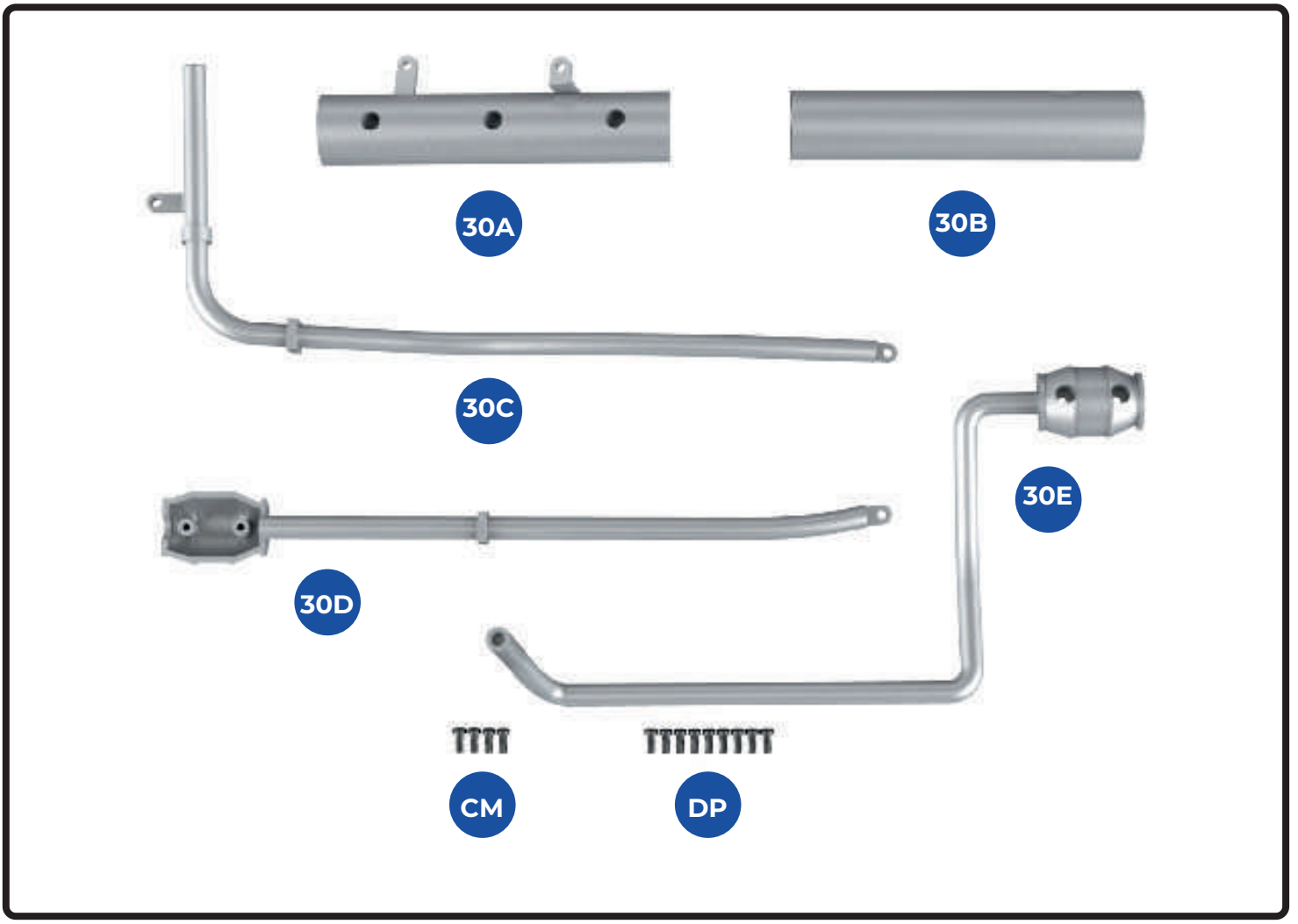

KEY TO PARTS SUPPLIED

30A	Silencer top		
30B	Silencer bottom	**CM**	1.7 x 4mm (x4)
30C	Exhaust pipe	**DP**	1.7 x 4mm (x9)
30D	Exhaust pipe		
30E	Exhaust pipe		

Now that the engine is fitted to the sub-frame assembly, it is important that the assembly is properly supported when it is turned upside down to work on details. This will prevent damage to the engine parts.

1

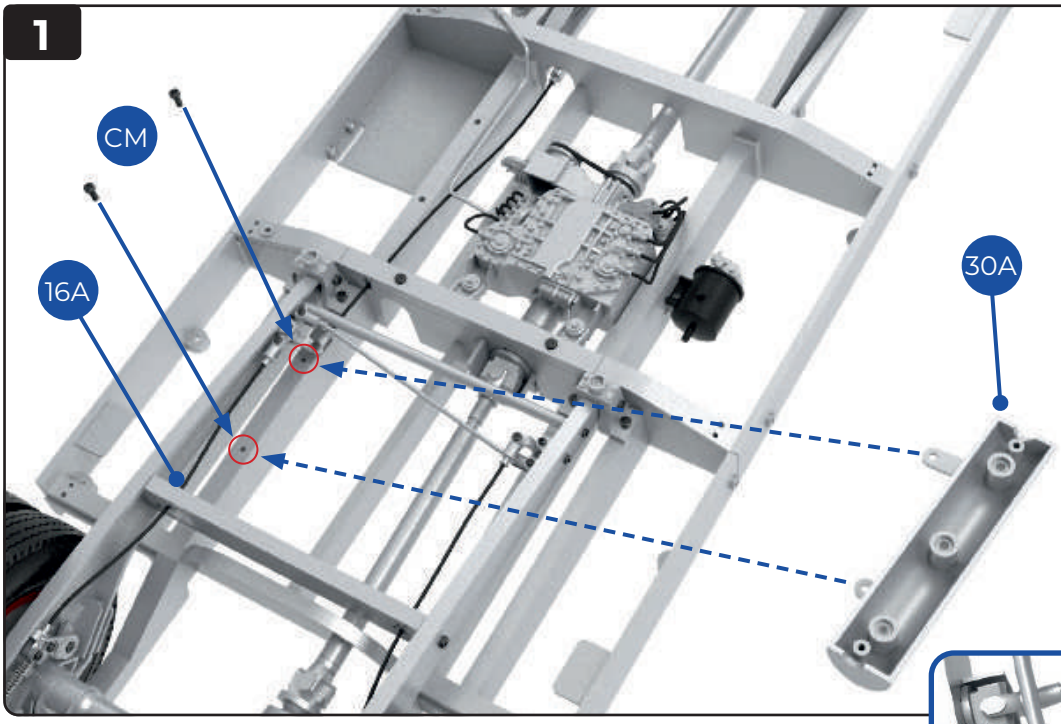

1 Take the silencer top 30A and the subframe assembly. Work on the underside, supporting the frame carefully and taking care not to rest the assembly on any engine parts. Identify the two holes in the rear part of the frame 16A (circled in red). Position the two screw eyes on the side of part 30A over the screw sockets in the frame. Fix in place with two CM screws. The image below shows part 30A fixed in place.

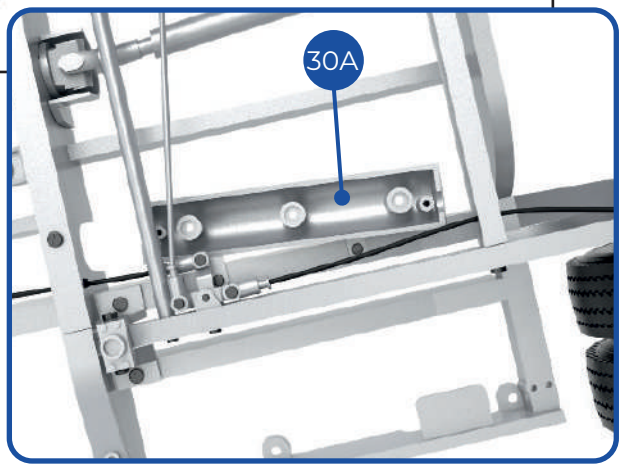

2

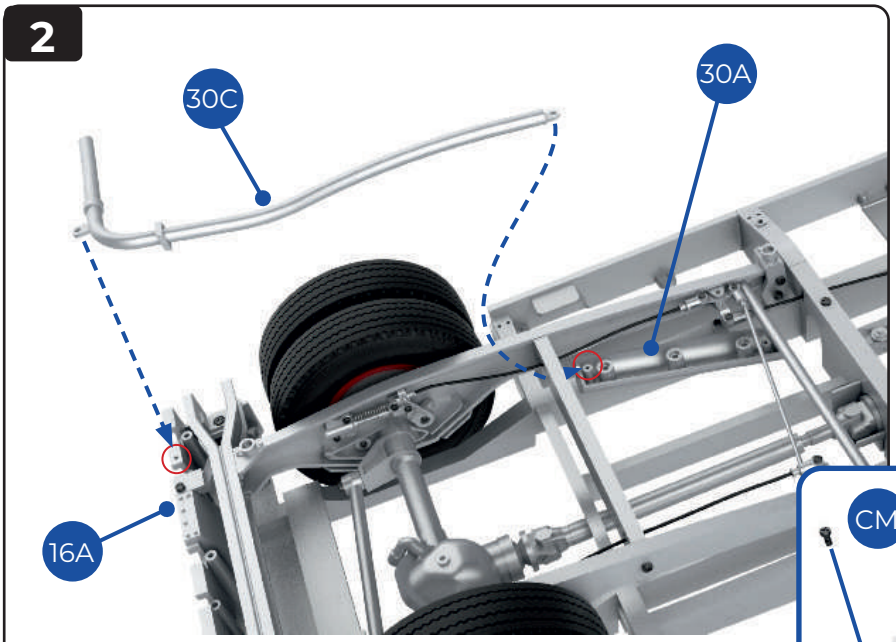

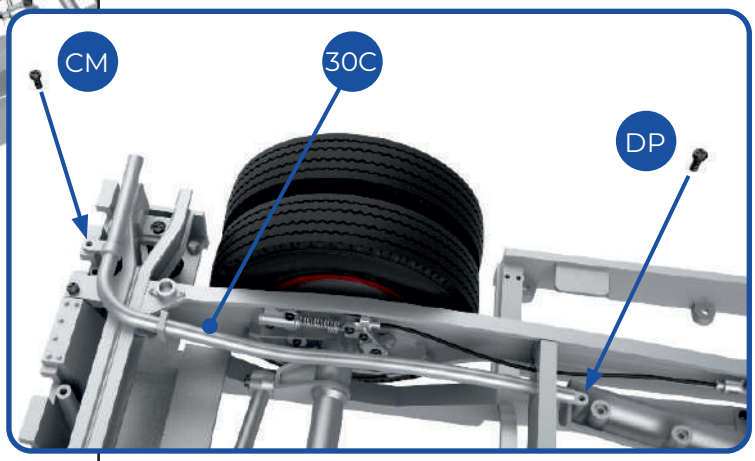

2 Take the exhaust pipe 30C and identify the fixing points (circled in red) for the exhaust pipe. The hole on the end of the pipe goes through a hole in the cross member of the frame 16A and fits over the screw hole in part 30A. The hole near the elbow of the exhaust fits over the screw hole at the back of the subframe. Fix in place with one CM screw and one DP screw, as shown in the inset, right. NOTE: Support part 30A from below while you fix it in place.

3

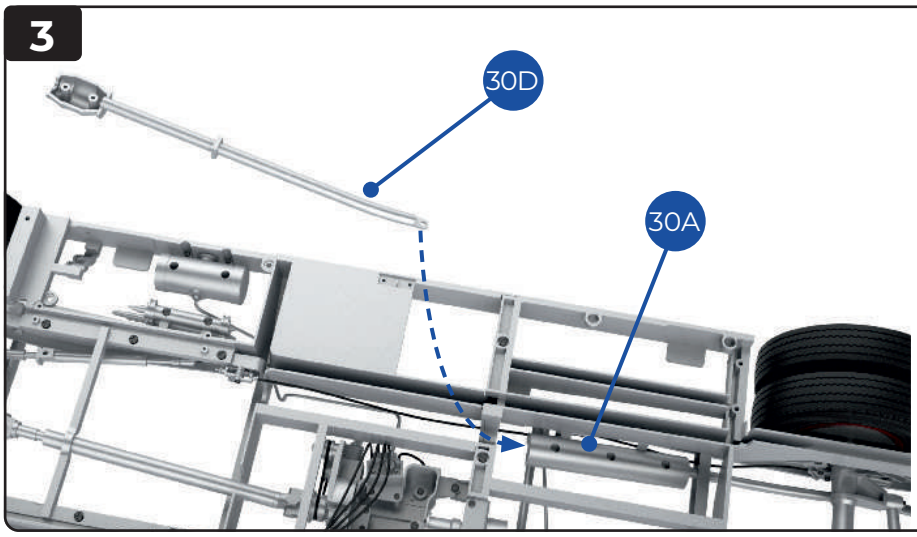

3 Take the next section of exhaust pipe, 30D and fit the screw hole on the end into the silencer 30A. NOTE: in this diagram the view is from the top side of the subframe. There is a recess in the end of the silencer that the pipe fits into. It may be helpful to hold part 30D in place temporarily wth masking tape.

4

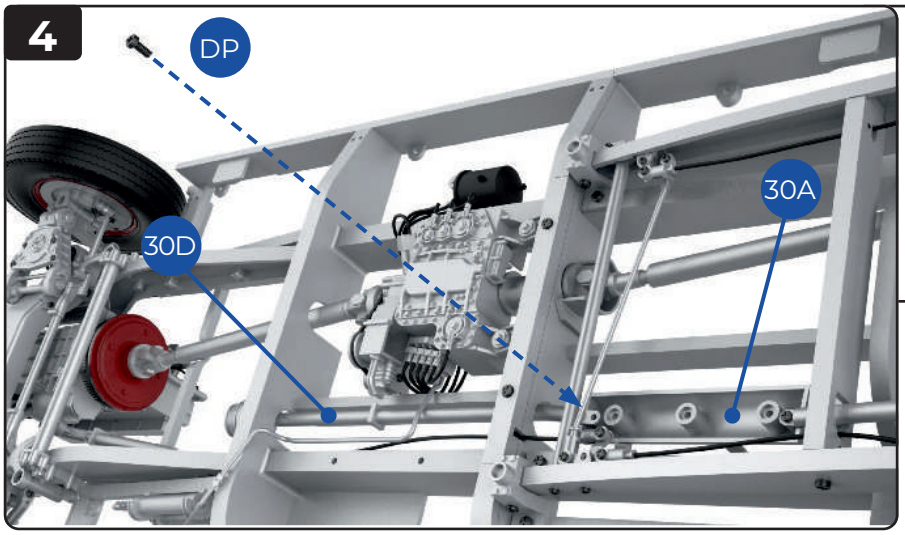

4 Turn the frame over, supporting it carefully to avoid damage to the engine parts. Check that the screw hole on part 30D is over the screw socket in part 30A. Fix the end of the exhaust in place with a DP screw.

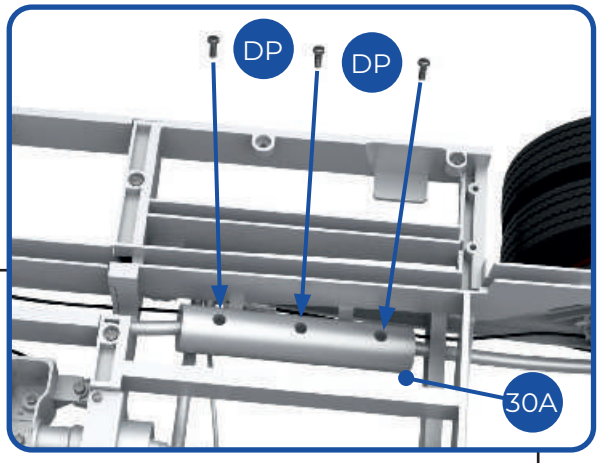

5

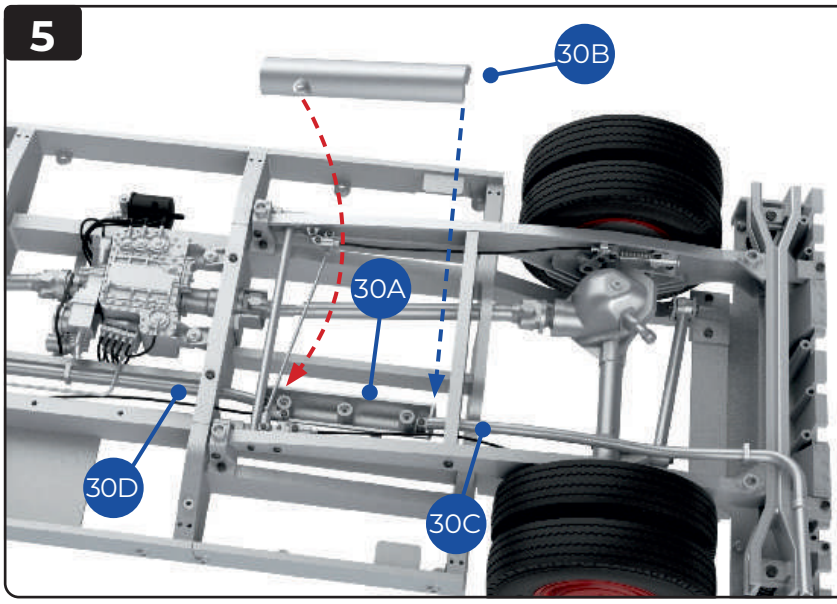

5 Fit the silencer bottom 30B to the silencer top 30A so that the ends of the exhaust pipes 30D and 30C are enclosed. The end of part 30B has a recess which goes under the brake line, as indicated by the red arrow. NOTE: The diagram on the left is a view from below. Working with the subframe the right way up, fix the silencer parts together with three DP screws (inset, above).

6

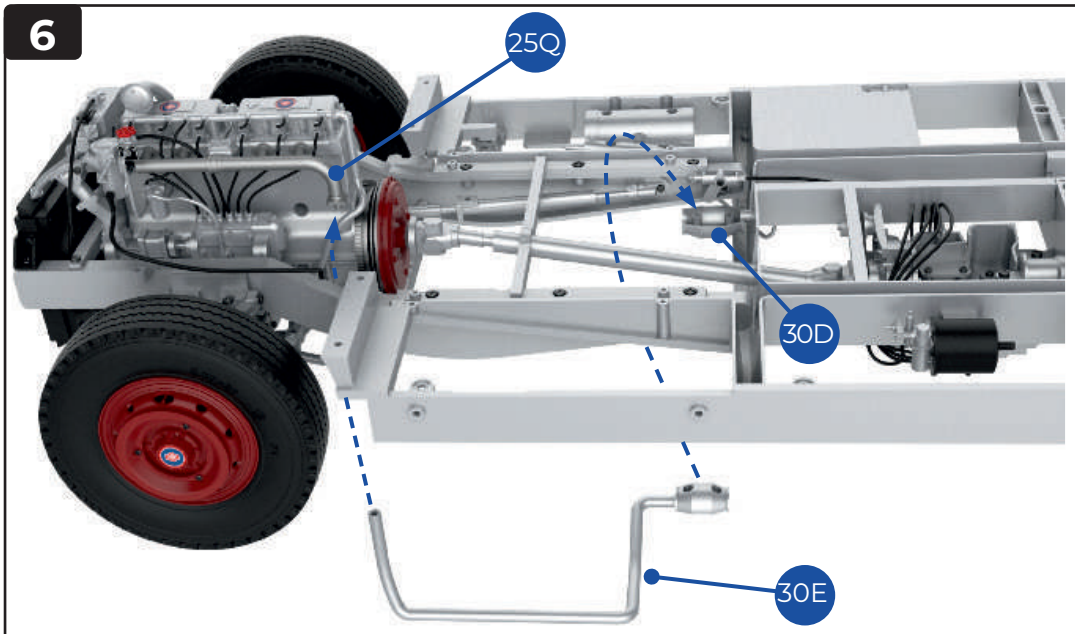

6 Take part 30E and identify the fixing points. One end fits on a peg at the end of the exhaust manifold 25Q. The shaped end of part 30E fits on top of the end of part 30D.

7

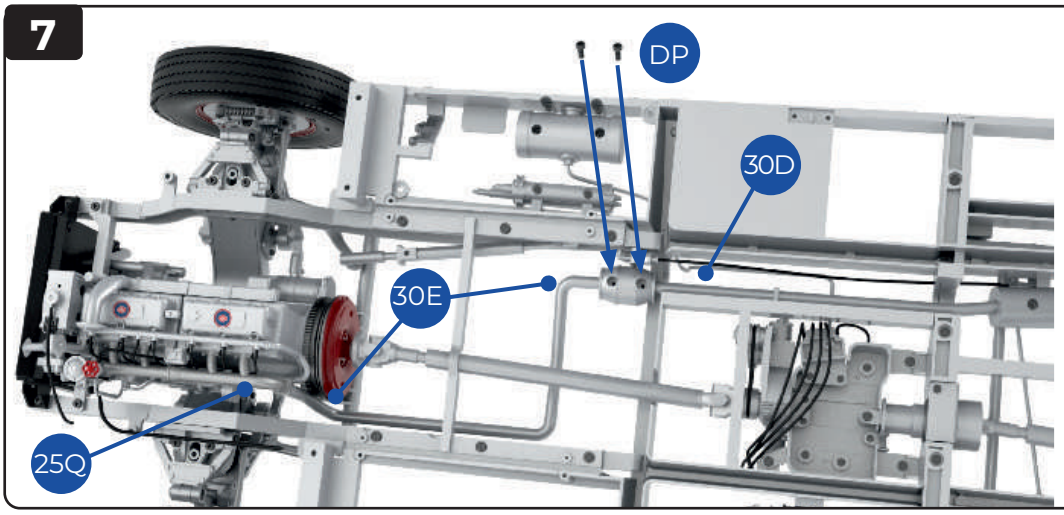

7 Fix the shaped end of exhaust pipe 30E to the end of pipe 30D using two DP screws. Ensure that the other end of part 30E remains correctly fitted to the exhaust manifold 25Q.

Assembly guide

Use the assembly guide as a quick check that you have assembled all the parts at this stage. Always follow the step-by-step instructions to ensure the parts are fitted in the correct order.

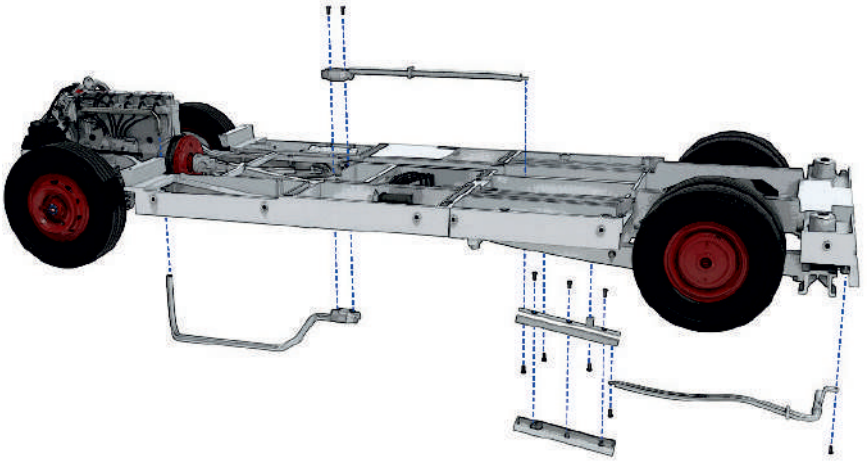

Finished views

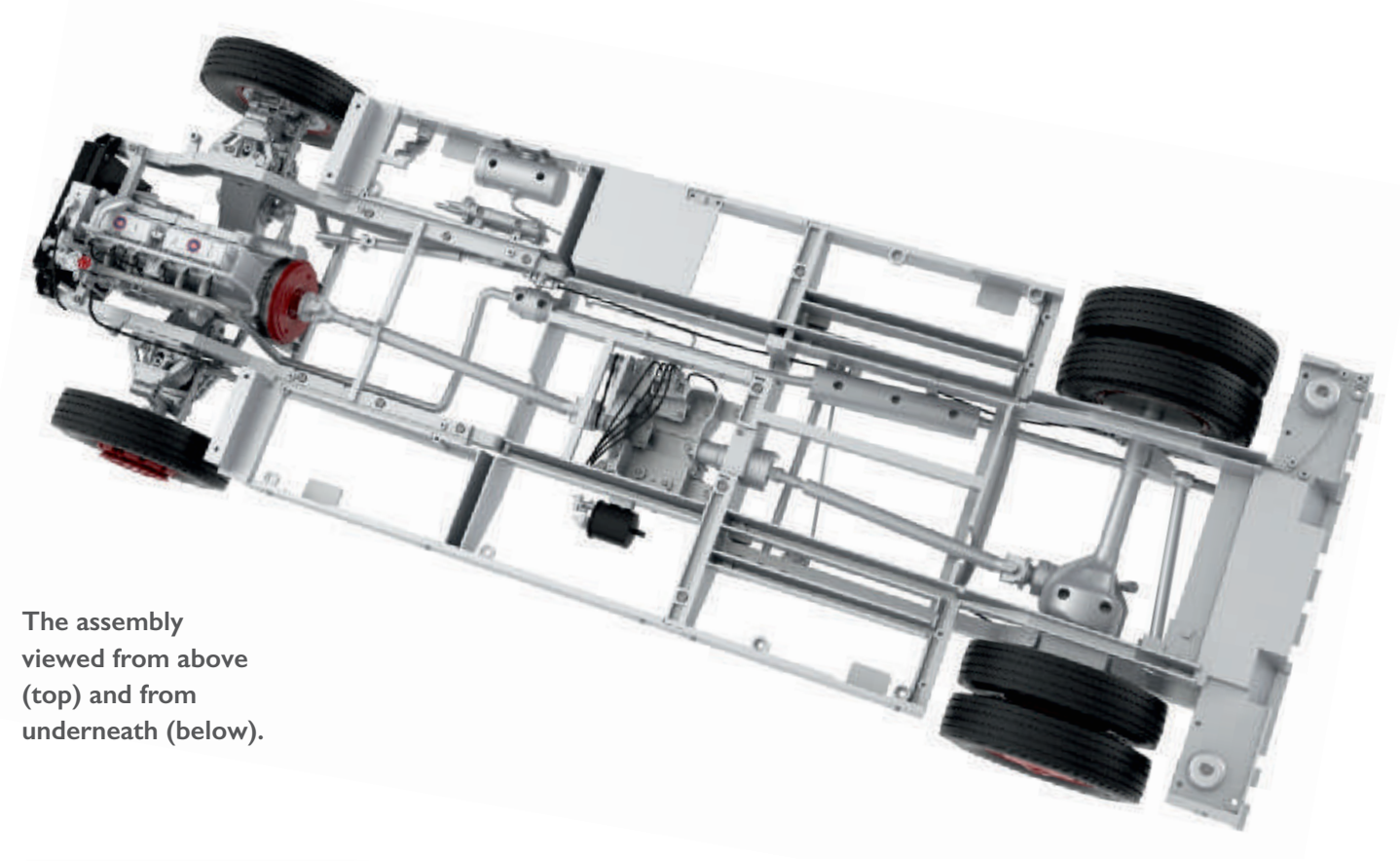

The assembly viewed from above (top) and from underneath (below).